KINOVA

TOGETHER IN ROBOTICS

MEET GEN3

USER GUIDE

Contents

Introduction 1
- Welcome 1
- Intended domains of application 1
- About this document 1
- Warranty 2
- Safety directives and warnings 2
- Disclaimer 6
- Risk assessment 6
- Normal use definition 7
- Applicable firmware and API versions 8

Robot components 10
- Overview 10
- Base 11
  - Quick connect base 12
  - Fixed base 13
  - Base connector panel 14
  - Base mounting interface 15
- Actuators 17
- Interface module 18
- Vision module 21
- Robot communications and network interfaces 22

Getting started 25
- Overview 25
- What's in the case? 25
- Manipulating the robot joints when the robot is powered off 27
- Robot mounting options 27
  - Mounting the robot on a tabletop with mounting plate and table clamp 28
  - Mounting the robot on a horizontal surface without the table clamp 31
  - Mounting plate bolting pattern 32
  - Base mounting interface bolting pattern 33
  - Mounting the robot on a wall or ceiling 34

Robot power adapter and E-stop....37
Powering robot from a battery via a custom wiring harness....38
Powering on the robot....40
Powering on a robot configured with automatic start up....41
Power-up, booting, and initialization sequence....41
Resetting the robot to factory settings....43
Restore factory settings on an automatic-powered robot....44
Resetting to factory settings with a USB....45
Operating the robot....45
Overview of operating the robot....45
Supported control devices....46
Home and retract positions....53
Putting the robot into admittance using the interface buttons....54
Connecting a computer to the robot....55
Connection options....55
Connecting a computer to the robot via Ethernet (for the first time)....56
Kinova® Kortex™ Kortex Web App....58
Changing the robot wired connection *IP* address and connecting the robot to a LAN....62
Connecting a computer to the robot via Wi-Fi....63
Assigning a static *IP* address for Wi-Fi to the robot....65
Disabling Wi-Fi....66
Enabling Wi-Fi....68
Disabling Bluetooth....70
Enabling Bluetooth....71
Packaging Gen3 Ultra lightweight robot in general....72
Packaging Gen3 using the ReachJointAngles command....73

Dimensions, specifications, and capabilities....75
Schematic and dimensions - 7 DoF spherical wrist....75
Schematic and dimensions - 6 DoF spherical wrist....76
Technical specifications....77
Sensors....80
Effective workspace....81
Payload vs. workspace....83

Wrist interface, tool expansion, and vision....84
Interface module expansion - tips for installing tools....84

End effector reference design....85
Removing end cap from the interface module....89
Robotiq Adaptive Grippers installation (optional)....90
Robotiq 2F-85 and 2F-140 Gripper default configuration settings reference....93
Interface module bolting pattern....94
Interface module user expansion connector pinout....95
Using interface module expansion to control devices via API....97
Spring-loaded connector pinout....97
Configuring the Ethernet bridge....99
Accessing Vision module color and depth streams....101

Robot control....102
High-level and low-level robot control....102
High-level and low-level robot control methods reference....103
Control features....106
Singularity avoidance....106
Protection zones....107
Joint limits....108
Cartesian limits....112
High-level control modes description....112
Trajectory control modes....113
Joystick control modes....115
Admittance modes....116
Force Control modes....117
Low-level control detailed description....117
Low-level control implementation....117
Low-level feedback....119
Low-level commands....123
Waypoint trajectories....124
Angular waypoints....125
Cartesian waypoints....125
Validation of a waypoint list....126

Configurations and safeties....127
Configurable parameters....127
Control library configuration....127
Base configuration....130

Actuators configuration.... 131
Interface configuration.... 133
Device configuration.... 133
Vision configuration.... 134
Safety items.... 136
Base safeties.... 136
Actuator safeties.... 139
Interface module safeties.... 142

Kinova® Kortex™ Web App User guide.... 144
Introduction.... 144
Purpose.... 144
Device availability of Kortex Web App.... 144
Platform and browser support.... 147
User login.... 148
Kortex Web App layout and navigation.... 149
Robot control panel.... 153
Pose virtual joystick control.... 153
Angular virtual joystick control.... 155
Virtual joystick keyboard shortcuts.... 156
Admittance modes panel.... 158
Actions panel.... 159
Camera panel.... 159
Snapshot tool.... 160
Main pages.... 160
Configurations page group.... 160
Safeties.... 171
Operations page group.... 172
Systems page group.... 187
Users.... 194

Kinova® Kortex™ Developer guide.... 197
Introduction.... 197
Devices and services.... 198
Available services.... 198
Services, methods, and messages.... 199
Kinova® Kortex™ API and Google Protocol Buffer.... 200
Service client-server model.... 200

Blocking and non-blocking calls....201
Users, connections and sessions....201
Device routing and transport....202
Robot servoing modes....203
High-level servoing....203
Low-level servoing....205
Low-level bypass servoing....205
Notifications....205
Error management....206
Error codes....206
Kinova® Kortex™ GitHub repository....211
Kinova® Kortex™ ROS packages and GitHub repository overview....212
Kinova® Kortex™ MATLAB® API and GitHub repository overview....213
Working with camera streams using GStreamer....213
Windows command examples....214
Linux command examples....215
Kinova® Kortex™ ROS vision module package and Github overview....216

Guidance for advanced users....217
Overview....217
Reference frames and transformations....217
Standard robot frames....217
Homogeneous transforms....218
Homogeneous transform matrices - 7 DoF spherical wrist....219
Homogeneous transform matrices - 6 DoF spherical wrist....221
Vision module sensors reference frames....222
Denavit-Hartenberg (DH) parameters....224
Denavit-Hartenberg (DH) parameters - 7 DoF spherical wrist....224
Denavit-Hartenberg (DH) parameters - 6 DoF spherical wrist....225
7 DoF singular configurations....226
6 DoF singular configurations....228
Inertial parameters definition....229
Inertial parameters of the 7 DoF robot....230
Inertial parameters of the 6 DoF robot....235

Maintenance and troubleshooting....239
Maintenance....239

Troubleshooting....241
Base LEDs interpretation....242
How to respond to safety warnings and errors....243
Exporting the journal....246
Contacting Kinova support....246

Harmonized Standards, Declarations and Certificates....248

Glossary....250

Introduction

Welcome

Welcome to the Kinova® *Gen3 Ultra lightweight robot*.

Thank you for choosing our robot as a *tool* for your applications.

This document is meant to provide you with all the information you need to get up and running with your new robot and get the most out of it.

We are here to help you in your journey. If you need any help or have any questions about how to get to where you want to go with the robot, please feel free to contact our support team:

www.kinovarobotics.com/support

Intended domains of application

The robot is intended for specific domains of application.

This product is intended for the research and professional fields.

The robot should not be used as an assistance robot for people with reduced mobility.

The robot can be used for research on assistive tasks as long as no clinical trial is carried out.

About this document

General information about the user guide.

Warning: Read all instructions before using this product and any third-party options.

Warning: Read all warnings on the product and in this guide.

This document contains information regarding product setup and operation. It is intended for Kinova product end users.

All third-party product names, logos, and brands appearing herein are the property of their respective owners and are for identification purposes only. Their use in this document is not meant to imply endorsement by Kinova.

© 2025 Kinova inc. All rights reserved.

Kinova has made every effort to ensure that this document is accurate, accessible and complete. As part of our commitment to continuous improvement, we welcome any comments or suggestions at support@kinova.ca.

From time to time, Kinova will make updates to this document. To download the most up to date version of this document, visit the product technical resources page on the Kinova website.

For general inquiries, contact us at +1 (514) 277-3777 or at info@kinova.ca.

Warranty

Refer to the *Term and Conditions* on the Kinova website: https://www.kinovarobotics.com/legal/terms-and-conditions.

Safety directives and warnings

Directives, warnings and safety considerations for the Kinova® Gen3 Ultra lightweight robot.

IMPORTANT

Before operating the robot for the first time, ensure that you have read, completely understood and complied with all of the following directives, warnings and cautionary notes. Failure to do so may result in serious injury or death to the user, damage to the robot, or a reduction in its useful life.

Warning: A warning is a potentially hazardous situation that can cause minor to moderate injury to yourself or others, might result in serious injury or even death, and can damage the property significantly. Avoid potentially hazardous situations that are associated with warnings.

A warning may contain one of three sub-categories: strongly recommended, never, and always.

Table 1: Safety for Gen3 Ultra lightweight robot variant (KR L53 0006, KR L53 0007)

Warning:
Do not use Software Package v2.5.4 on Gen3 Ultra lightweight robots robots that do not have brake configuration.

© 2025 Kinova inc. All rights reserved.

When there suddenly is no power or an unrecoverable error occurs, the robot arm drops suddenly when the robot is stopped.

Table 2: Safety for Gen3 Ultra lightweight robot variant with mechanical brakes (KR L53 0008, KR L53 0009, KR L53 0010, KR L53 0011)

Important: All Gen3 Ultra lightweight robots with brake configuration are obsolete; they are not sold. Clients who have bought Gen3 Ultra lightweight robots with brake configuration are supported.

Refer to *Kinova® Gen3 Ultra lightweight robot user guide r9.2* in the Kinova Artifactory archives for information related to brakes.

Important: Always use Software Package v2.5.4 when using Gen3 Ultra lightweight robots with brake configuration.

Table 3: Safety for all types of Gen3 Ultra lightweight robot

Warning:

Strongly recommended
Perform a risk assessment, before integration of the robot into a given application.
Perform a hazard analysis, before integration into an environment, which includes atomized flammable dust, particles or explosive, flammable gases, and so on.
Never
Use the robot near a flame or source of heat.
Use the robot to submerge objects in water.
Exceed the maximum specified payload.
Attempt to stop the robot or prevent its movement by holding it (except in *admittance* mode).
Install the robot *base* within 20 cm of your body (base contains a Wi-Fi transmitter).
Power up and boot, reboot, or upgrade firmware of the robot unless the robot is in a stable *position*.
Always make sure
The robot does not encounter any obstacles (persons or objects). Although inherently safe in its default configuration, disabling the robot *safeties* requires that the user be responsible for ensuring a secure working space.
The *end effector* never collides with a hard surface.

© 2025 Kinova inc. All rights reserved.

The grasping of objects by gripper fingers is stable, to prevent the risk of dropped or thrown objects (if using a gripper).
The wrist is supported before turning the power off, otherwise, it may fall and cause damage.
The working area is safe when containers of hot, or extremely cold, liquids are to be manipulated with the robot.
The robot working area is safe if sharp objects are to be handled by the robot.
The robot has its base securely fixed to the work surface when in operation.
The robot has no warning before starting to use it.
The robot is protected adequately before being used near any messy process (for example, welding or painting)
General warnings
When using a payload with the robot, ensure that the robot is configured with the parameters of the *tool* and payload using the Kinova® Kortex Web App or the `Kinova.Api.ControlConfig` *Application Programming Interface (API)*. For more details, see the *API* documentation on GitHub and the "Interface, expansion, and vision" section of the User Guide. The robot may behave in an unexpected manner if the payload parameters are not properly configured.
When mounting the robot in a wall or ceiling mount, ensure that special considerations and configurations set out in the User Guide are followed, including analysis of the mounting surface, use of the base locking screw, *orientation* of the base connector panel, and configuration of the *gravity vector*.
High-level force control is supported as an **experimental feature**. Users should exercise caution.
Low-level *torque control* is for **advanced users only** and should only be used by users who know what they are doing. It is very important to carefully monitor the torque commands sent to the actuators to ensure that excessive values are not sent. Incorrect use can lead to rapid movements that can be dangerous for people and equipment. Make sure that the area around the robot is clear before experimenting with torque control.
Do not power on the robot if any external damage to the vision module is apparent.
Do not attempt to open the vision module.
Do not view the front-facing surface of the vision module through magnifying optical elements; eyesight injury is possible from wide angle infrared laser light.
Do not use the robot without the provided emergency stop connected.
Do not operate the robot when the relative humidity exceeds the maximum specified limit. In such a case, remove any object in the gripper, bring the robot to a resting position and wait until the humidity decreases to an allowable value.

© 2025 Kinova inc. All rights reserved.

Do not operate the robot in applications that require sterile environments; for example, do not use in food production, pharmaceuticals, medical, surgical.
Use individual protection equipment, such as eye protection, as determined by the user, based on risk analysis.
Use appropriate protective gear to handle glass fragments. The Vision module contains glass components that may break upon impact. Glass fragments are sharp.

Table 4: General

Warning: Do not connect the *Universal Serial Bus (USB)* ports on the base to one another.
Do not use the table clamp for repeated movement because the mounting may eventually detach from its location, resulting in the robot falling. Mount the robot securely with screws as described in the "Getting Started" section of the User Guide for a more permanent installation.
Mount the base as specified in the installation section, with particular attention to the bolt pattern, strength requirements, and any table or tripod-specific mounting.
Mount any end effector as specified in the installation section with particular attention to the bolt pattern, power requirements, and so on.
Recommended: Use surge protection to protect the robot against external surges on the main AC line which might be caused by lightning or other abnormal conditions.

Table 5: Maintenance

Warning: Do not use the robot in heavy rain. If this happens, contact support@kinova.ca to schedule maintenance by an authorized Kinova technician.
Contact support@kinova.ca to schedule maintenance by authorized Kinova technician immediately following exposure to saline air conditions.
Keep the controller mating interface free of dust and moisture to protect the electrical contacts. Wipe down the surface with a soft, dry cloth to keep the surface of the interface clean.

© 2025 Kinova inc. All rights reserved.

Disclaimer

Kinova® and the Kinova logo are registered trademarks of Kinova inc., herein referred to as Kinova.

Kortex™ is a trademark of Kinova inc.

All other brand and product names are trademarks or registered trademarks of their respective owners.

The mention of a product name does not necessarily imply an endorsement by Kinova. This manual is furnished under a lease agreement and may only be copied or used in accordance with the terms of such lease agreement. Except as permitted by the lease agreement, no part of this publication may be reproduced, stored in any retrieval system, or transmitted, modified in any form or by any means, electronic, mechanical, recording, or otherwise, without prior written consent of Kinova.

The content of this user guide is furnished for informational use only and is subject to change without notice. It should not be construed as a commitment by Kinova. Kinova assumes no responsibility or liability for any errors or inaccuracies that may appear in this document.

Changes are periodically made to the information herein and will be incorporated into new editions of this publication. Kinova may make improvements and/or changes to the products and/or software programs described in this publication at any time.

Any questions or comments concerning this document, the information it contains or the product it describes may be addressed at support@kinova.ca.

Kinova would like to thank you for your contribution, while retaining the right to use or distribute whatever information you supply in any way it believes appropriate (without incurring any obligations to you).

Risk assessment

Before proceeding it is imperative that a risk assessment be performed (note that this is required by law in many countries). As it is a machine, the safety of the robot depends on how well it is integrated with its environment and with other machines.

The recommended international standards for conducting a risk assessment are as follows:

- *International Organization for Standardization (ISO)* 12100
- ISO 10218-2

© 2025 Kinova inc. All rights reserved.

The risk assessment should take into consideration all activities carried out in the context of the robot application, including (but not limited to):

- teaching the robot (during set-up)
- development of the robot installation
- robot troubleshooting
- robot maintenance
- everyday robot operation

The risk assessment must be completed **before** integration of the robot in an application and must be kept up to date with any changes in the parameter settings, work environment, or tasks of the robot. The risk assessment should address configuration settings as well as the need for any additional emergency stop buttons.

Normal use definition

Definition of normal use of the robot.

The definition of *normal use* includes lifting, pushing, pulling, or manipulating (without a gripper or other *tool* attached) a maximum load of:

- mid-range, continuous: 4.0 kg
- full-range, continuous 2.0 kg

The robot is designed to hold, move, and manipulate objects in the user environment. However, for some loads in certain *positions* (near maximum load and reach), holding an object for an extended period of time may result in heating. To protect the robot hardware from excessive heat, safety thresholds shut down the robot if the temperature rises above a certain threshold. Before this is reached, an *API notification* will be rendered as a user alert in Kortex Web App.

The robot includes a number of temperature-related *safeties*:

- *base* - CPU core and ambient temperatures
- actuators - CPU core and motor temperatures
- interface module - CPU core and gripper motor temperatures

If you receive any temperature warnings, put down any object as soon as is practical and place the robot into a stable rest position to allow it to cool down.

During normal operation, the robot *joints* are subject to heating. The joints are normally covered in rubber rings to protect the user from the metal surfaces which may become hot.

© 2025 Kinova inc. All rights reserved.

Applicable firmware and API versions

The contents of this user guide relate to specific firmware and software versions for the robot.

This information in this document is applicable to the following combination of firmware and *API* versions of the Gen3 Ultra lightweight robot.

Table 6: Firmware and API versions

Firmware version	2.7.0
***API* version**	2.7.0

If you are using an earlier firmware or software version, some of the features discussed in the document may not apply to your setup. To upgrade firmware and software, see the downloadable packages available on the product technical resources page on the Kinova website and installable using the Kortex Kortex Web App **Upgrade** page.

In addition, refer to the following compatibility matrix to ensure that the firmware you are using corresponds to the your hardware and *API* version.

Table 7: Compatibility matrix

Robot / gripper hardware configuration and API version		**Robot firmware version**								
		2.0.0	**2.0.1**	**2.2.0**	**2.3.0**	**2.4.0**	**2.5.1**	**2.5.2**	**2.6.0**	**2.7.0**
6 DoF (fixed *base* with and without vision)		-	-	✓	✓	✓	✓	✓	✓	✓
7 DoF	Quick connect base with vision	✓	✓	✓	✓	✓	✓	✓	✓	✓
	Quick connect base without vision	-	-	✓	✓	✓	✓	✓	✓	✓
	Fixed base with vision	-	-	✓	✓	✓	✓	✓	✓	✓
	Fixed base without vision	-	-	✓	✓	✓	✓	✓	✓	✓
Robotiq 2F-85 gripper		✓	✓	✓	✓	✓	✓	✓	✓	✓
Robotiq 2F-140 gripper		-	-	✓	✓	✓	✓	✓	✓	✓

© 2025 Kinova inc. All rights reserved.

Robot / gripper hardware configuration and API version	Robot firmware version								
	2.0.0	**2.0.1**	**2.2.0**	**2.3.0**	**2.4.0**	**2.5.1**	**2.5.2**	**2.6.0**	**2.7.0**
Recommended Kinova Kortex *API* version*	2.0.0	2.0.0	2.2.0	2.3.0	2.5.0	2.6.0	2.6.0	2.7.0	2.7.0

* In order to access the full feature set of the corresponding firmware version.

© 2025 Kinova inc. All rights reserved.

Robot components

Overview

The robot consists of several main components, and is available in different models and hardware configurations.

The robot consists of:

- *base*
- actuators
- interface module
- vision module (option)

The following image shows the main components of the robot. The robot is available in two models:

- 7 *degrees of freedom (DoF)*
- 6 *DoF*

This document describes both models. Wherever there is information specific to only one particular model, this will be indicated in the text.

Each of these DoF models come in multiple different hardware configuration options. The details of this will be discussed later in the document.

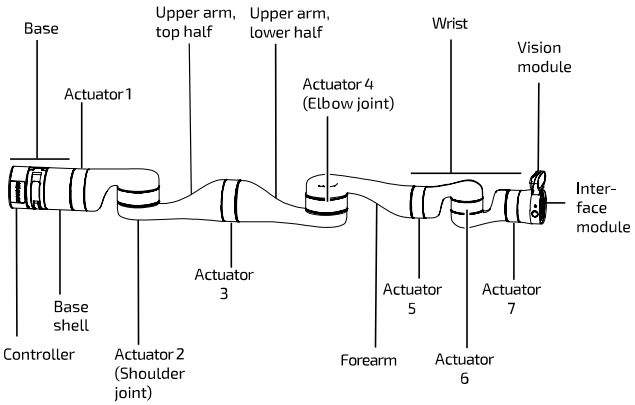

Figure 1: Robot main components (7 DoF model with quick connect base and vision module)

© 2025 Kinova inc. All rights reserved.

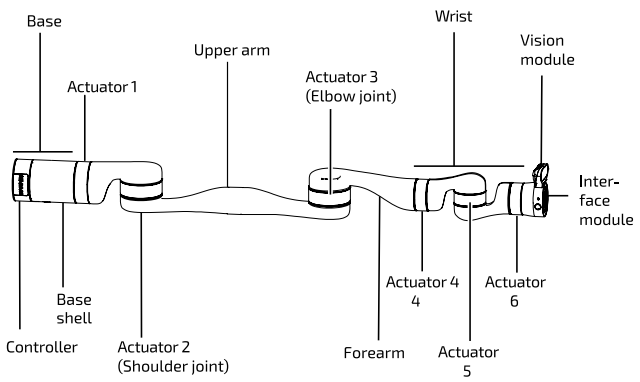

Figure 2: Robot main components (6 DoF model with fixed base and vision module)

Base

The robot base provides for physical mounting of the robot and for power and communication/control. The base is the brains of the robot and contains a number of important internal components. The base comes in two different versions, quick connect and fixed base.

The robot *base* is the lower foundation of the robot and provides interfaces for:

- physical mounting of the robot
- power and communication/control

The base includes a connector panel at the rear for connecting to power and external devices and mounting holes on the bottom surface for affixing the robot at the mounting site.

The base includes a built-in controller that serves as the brain of the robot. The internal components of the base controller include:

- CPU
- Wi-Fi/Bluetooth adapter (Only Wi-Fi is used at present)
- Ethernet switch
- *USB* hub
- temperature sensor
- accelerometer/gyroscope

A Linux web server runs on the base and manages connectivity between the base and the robot devices, and between the robot and an external computer.

The robot base comes in two versions:

- quick connect base (7 DoF legacy model only)
- fixed base (6 DoF and 7 DoF)

© 2025 Kinova inc. All rights reserved.

The table below summarizes the different base options.

Table 8: Base options

Degrees of freedom model	Base options
6 DoF	Fixed base
7 DoF	Fixed base
	Quick connect base (legacy only)

Quick connect base

The quick connect base is a two-part structure. This allows the robot controller to be mounted in one place while allowing the robot to be quickly attached and detached. This base option is only available for the 7 DoF robot model.

With the quick connect *base*, the base is a two-part structure securing the robot onto its physical mounting point and connecting the robot to power and control signals. This consists of two parts:

- quick connect controller
- base shell

The two-part system enables simple connection and disconnection of the base shell and quick connect controller. This allows the robot to be quickly detached from its mounting site and controller without disconnecting any cables. This can be useful for transport, for removal of the robot for servicing, or for convenient re-siting of robots between multiple installation sites.

The quick connect controller contains the robot controller and includes the base mounting interface and rear connector panel. The quick connect controller can be mounted in place at the mounting site with power and control cables connected.

The base shell is the bottom part of the robot shell connected to the first actuator. It slides onto the quick connect controller.

A mating interface on the top of the quick connect controller provides an electrical connection between the quick connect controller and the rest of the robot.

© 2025 Kinova inc. All rights reserved.

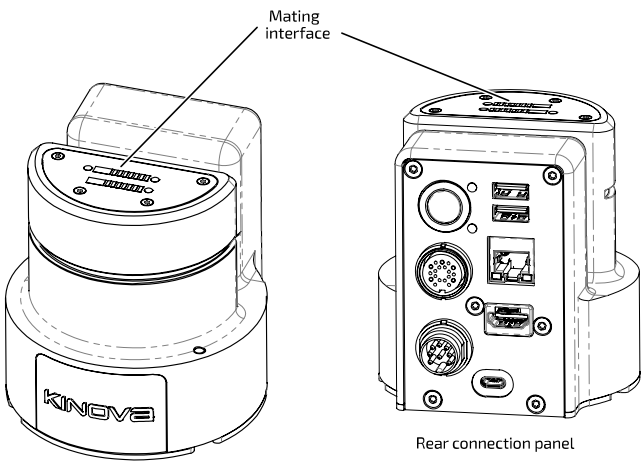

Figure 3: Quick connect controller

Note: Be careful to avoid damage to the electrical contacts on the mating interface of the controller when the base shell is disconnected. Make sure to keep the surface dry and free from dust. Wipe down with a soft dry cloth to keep the interface clean.

The base shell is secured in place on the controller by closing the clamp.

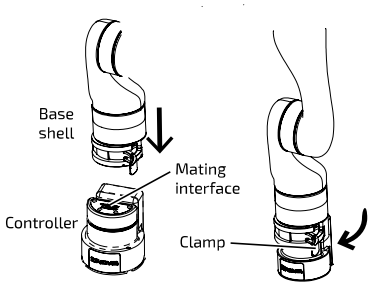

Figure 4: Connecting quick connect base

The clamping mechanism and mating interface allow the robot to be quickly and easily removed from the controller while leaving the controller still mounted in place with cables connected.

Note: Currently the quick connect base option is only available for the 7 DoF robot model.

Fixed base

The fixed base is a one piece base with the controller integrated with the robot. This base option is available for both the 6 DoF and 7 DoF robot models.

The fixed *base* is a one piece base integrated with the robot. The fixed base includes the same controller internals and the same rear connector panel and mounting interface as the standard quick connect base controller. This rigid, one part base allows for an added measure of stability and precision compared to the quick connect base, but with less flexibility and convenience when it comes to mounting and dismounting the robot.

© 2025 Kinova inc. All rights reserved.

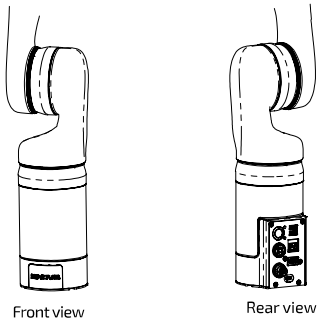

Figure 5: Fixed base

Base connector panel

The base connector panel is located on the back of the controller part of the robot base. This provides a connection point for the power supply and various cables. It also contains the power on/off switch and an *light-emitting diode (LED)* indicator.

The connector panel is located at the rear of the *base*. The connector panel is the same for all Gen3 robot models It features the following elements:

- On/Off power switch
- blue power LED indicator
- red/amber/green status LED indicator
- *High-Definition Multimedia Interface (HDMI)* Out (Internal use only)
- Micro *USB* (For firmware updates; internal use only)
- USB 2.0, type A - qty 2 - for wired controller. Top port 1 A for charging. Bottom port 500 mA max, for peripherals.
- RJ-45 Gigabit Ethernet (LAN)
- Binder-USA 09 0463 90 19 (Internal use only)
- Lumberg 0317 08 (power)

Note: Cables connected to the base controller must be less than 3 m in length. If not, you must perform a risk analysis. Cables longer than 3 m can potentially have an effect on radio frequency emissions and the immunity of the product.

© 2025 Kinova inc. All rights reserved.

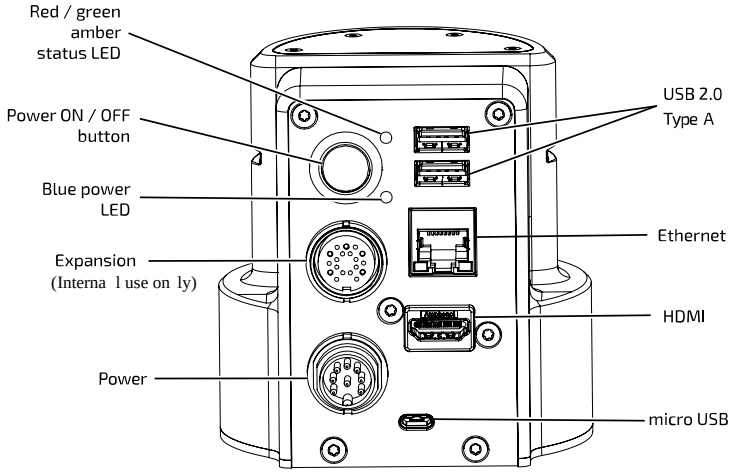

Figure 6: Base connector panel

Base mounting interface

The bottom of the base has a mounting interface for attaching the robot to a mounting plate or directly to a surface.

The *base* has a mounting interface with four mounting holes (M6) on its underside allowing for a few different mounting options.

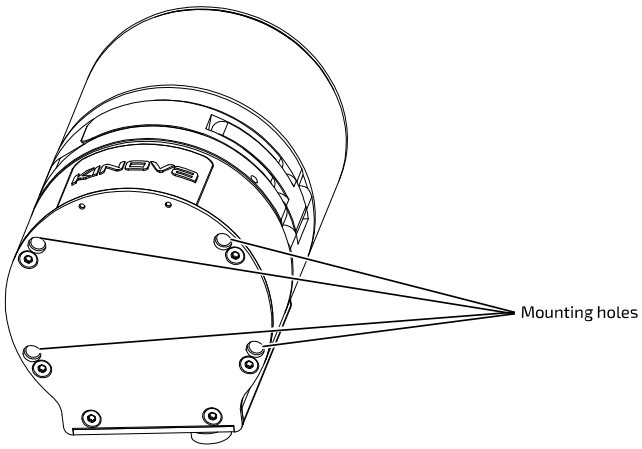

Figure 7: Base mounting interface

© 2025 Kinova inc. All rights reserved.

For the standard **quick connect base** option, the quick connect controller is shipped detached from the base shell and connected with screws to a circular **mounting plate**. This mounting plate has multiple sets of through holes to allow for:

- attaching the mounting plate to the base mounting holes
- attaching the mounting plate to a surface

The mounting plate also includes a slot to insert a **table clamp** between the robot and the mounting plate. The table mounting plate + table clamp mounting option allows for quick setup and takedown tabletop mounting.

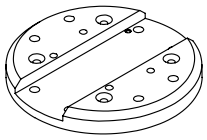

Figure 8: Mounting plate

When attached, the mounting plate can be removed from the base by removing the screws, giving access to the four mounting holes and allowing the controller to be mounted directly on the surface.

For the **fixed base** option, the mounting plate is detached from the base when shipped and needs to be attached before mounting the robot using the mounting plate.

Quick connect base feature - locking screw

The quick connect base features an inset locking screw within the mounting hole on the front bottom left (from the perspective of an observer behind the connector panel). Turning the locking screw with a 3 mm hex key clockwise will cause the screw to go forward and protrude up to a few millimeters through a hole above the top surface of the controller until it reaches the end of its travel.

If the base shell is already clamped onto the controller when this is done, the set screw will interface with a mechanism on the clamp, preventing the clamp from opening until the set screw is withdrawn. This serves as a safety mechanism. There is a hole on the front face of the clamp where the end of the lock screw can be seen when it is fully engaged. Confirm visually that the lock screw is not engaged before trying to open the clamp.

© 2025 Kinova inc. All rights reserved.

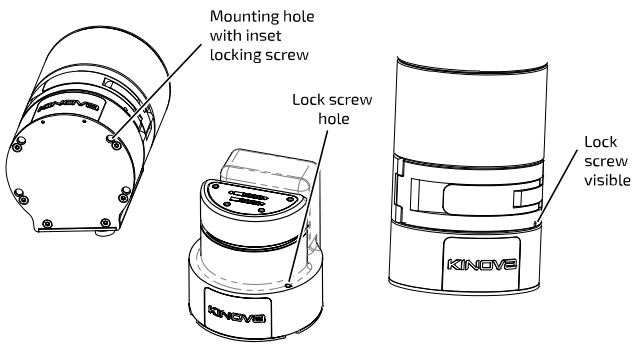

Figure 9: Locking screw mechanism

More details about the base mounting interface and its features can be found in the mounting instructions in the Getting started section of this user guide.

Actuators

The robot contains actuators which power the rotational movement at the robot joints. The robot contains both large and small actuators with distinct performance capabilities. The actuators contain sensors.

The rotational motion at each of the *joints* of the robot is powered by rotary actuators. There is one actuator for each joint. Each actuator allows for potentially unlimited rotation in either direction. There are software limits, however, on some joints to avoid collisions between robot shell segments.

There are two sizes of actuator:

- small
- large

Each actuator has:

- torque sensing
- current and temperature sensing on each motor phase

Wrist joints use small actuators, while large actuators are used for other joints. All actuators are equipped with a 100:1 strain wave gear for smooth motion.

The actuators are connected to each other and to the interconnect board using a series of 41-pin flex cables. These cables convey:

- power
- 2 x full-duplex 100 Mbps Ethernet
  - one for 1 kHz control

© 2025 Kinova inc. All rights reserved.

- one for vision / expansion data traffic

Actuator Specifications

Table 9: Actuator specifications

Actuator item	Small actuator	Large actuator
speed maximum, unloaded	25 *revolutions per minute (RPM)*	13 RPM
torque	nominal: 13 N·m	nominal for robots built before 2022-09: 32 N·m
		nominal for robots built after 2022-09: 39 N·m
	peak: 34 N·m	peak: 54 N·m

Important: All Gen3 Ultra lightweight robots with brake configuration are obsolete; they are not sold. Clients who have bought Gen3 Ultra lightweight robots with brake configuration are supported.

Refer to *Kinova® Gen3 Ultra lightweight robot user guide r9.2* in the Kinova Artifactory archives for information related to brakes.

Interface module

The interface module is located on the wrist of the robot and provides an interface for connecting a gripper or other tool. The interface module contains both mechanical and electrical interfaces.

The interface module provides an interface for connecting a gripper or other *tools* at the end of the arm. The interface module also provides a mounting point and connection for the vision module.

The interface module has a connection interface at the end of the arm, and is surrounded on the sides by a bracelet shell. The vision module (when present) is mounted on the top of the bracelet.

Note: While the vision module is standard on the interface module, there is an option to purchase the robot without it. The interface module for this option otherwise has the same components and connectivity as the standard interface module.

© 2025 Kinova inc. All rights reserved.

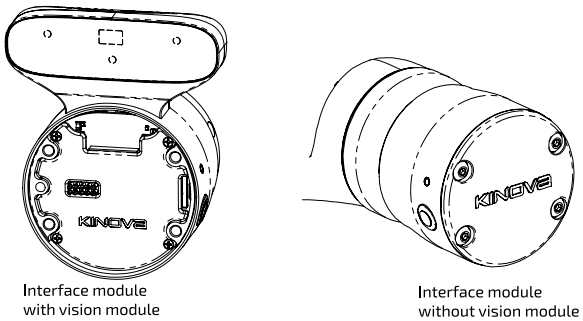

Figure 10: Interface module options

The bracelet includes two buttons used to activate *admittance* modes to interact with the robot. By default the button on the right hand side (viewed from behind) puts the arm into *Cartesian admittance* while the button on the left puts the arm into Joint admittance. The two buttons can be distinguished easily by touch without looking; the Cartesian admittance mode button sticks out from the surface in the center, while the *joint admittance mode* button is slightly indented in the center and ring-shaped.

Note: Pressing the two buttons together will put the 7 DoF model into *null space admittance* (but has no effect for the 6 DoF model).

The buttons are also used, in conjunction with the Kortex Web App, in support of **teaching mode**. There, the buttons are used to capture positioning *snapshots* for simplified creation of motion sequences. For more information about *teaching mode*, see the Kortex Web App User Guide section of this document.

The bracelet also includes two amber LEDs.

Note: For the no vision module model of the robot, the bracelet LEDs serve as useful visual reference cue for the *orientation* of the wrist. In the reference *frame* of the interface module, the LEDs will be "above" (positive y direction) their respective wrist buttons.

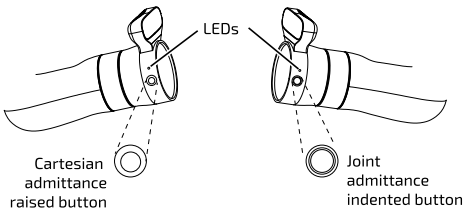

Figure 11: Bracelet features

The interface module takes a 41-pin input from the last actuator of the robot.

The interface exposes connectors that allow different *end effectors* to be integrated with the robot. It features:

- Kinova internal end-effector interface

© 2025 Kinova inc. All rights reserved.

- 10-pin spring-loaded connector with RS-485 (compatible with Robotiq Adaptive Grippers)
- 20-pin user expansion interface

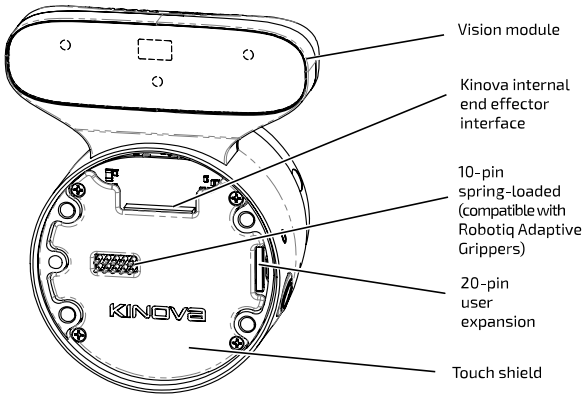

Figure 12: Interface module

The interface also includes four mounting holes for physical mounting of an end effector and a position key hole used for alignment of the end effector in the right orientation.

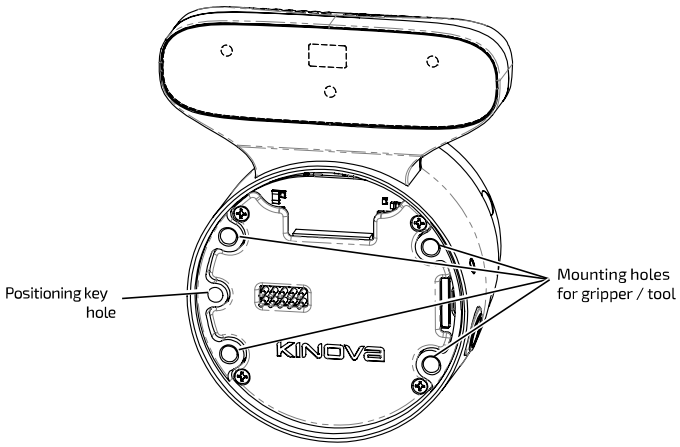

Figure 13: Mounting holes and positioning key hole

The interface module includes a 6-axis accelerometer / gyroscope. The module also includes an Ethernet switch to route connectivity and control data between the interface module and the vision module (if present) and any connected tool (for example, gripper).

Note: The printed circuit board (PCB) of the interface module is partially covered with a touch shield with holes to expose only the output connectors - 10-pin spring loaded connector, 20-pin user expansion connector, and Kinova internal end effector interface.

Note: When there is no end effector present, it is recommended to place an end cap over the face of the interface module. Kinova provides an end cap with the robot. This end cap is attached to the interface with screws using the mounting holes on the interface. The end cap needs to be removed to attach an end effector to the robot.

© 2025 Kinova inc. All rights reserved.

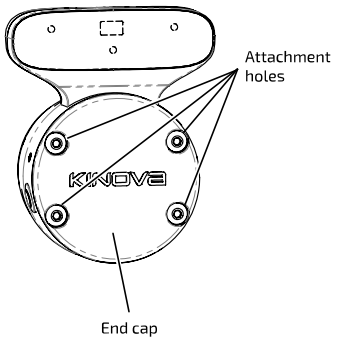

Figure 14: End cap

Vision module

The vision module enables computer vision applications with the robot. The vision module contains a depth sensor with two stereo imagers and an RGB color sensor.

The vision module is a module provided by Kinova to enable robotic computer vision applications.

For robots including the vision module, the vision module is mounted on the top side of the interface module. A housing containing sensors protrudes from the top of the interface module. The sensors are contained on the front face of the housing, facing out parallel to the *axis* of the last actuator.

The vision module is used to capture and stream image data captured looking in the direction the end of the robot (or attached *tool*) is pointed. The Vision module includes both a color sensor (**Omnivision OV5640**) and a stereo depth sensor (**Intel® RealSense™ Depth Module D410**).

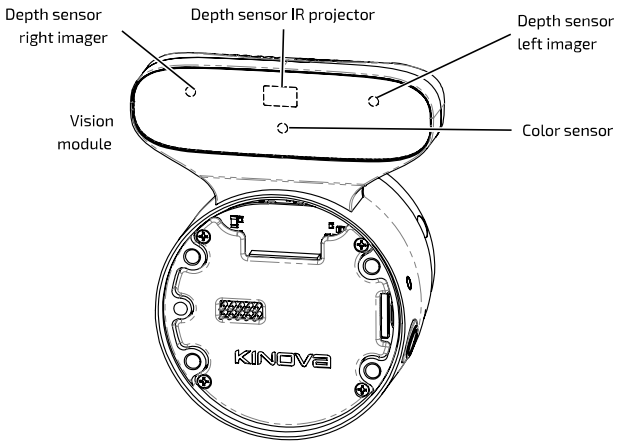

Figure 15: Vision module sensors

The **color sensor** captures a 2D array of RGB pixel data representing the field of view from the perspective of the sensor.

© 2025 Kinova inc. All rights reserved.

The **depth sensor** includes an IR projector and two stereo imagers - left and right. Here left and right are from the perspective of an observer looking out from the sensor toward the imaged region. The depth sensor captures a 2D array of pixels and the depth for each pixel within the field of view of the sensor.

Together, the two sensors allow the capture of RGBD (color and depth) data. Both camera sensors can be configured using the Kinova® Kortex™ `VisionConfig` interface.

Note that performance for the Vision module depth sensor may be degraded at temperatures below 0° C. For more details, please consult the depth sensor data sheet.

The color and depth sensors data streams are made accessible to developers through a computer with a connection to the robot. For more information on accessing these data streams programmatically, see here.

Vision module specifications

Color sensor:

- resolution, frame rates (*frames per second (FPS)*), and *field of view (FOV)*:
  - 1920 x 1080 (16:9) @ 30, 15 FPS; *FOV* 47 ± 3° (diagonal)
  - 1280 x 720 (16:9) @ 30, 15 FPS; FOV 60 ± 3° (diagonal)
  - 640 x 480 (4:3) @ 30, 15 FPS; FOV 65 ± 3° (diagonal)
  - 320 x 240 (4:3)@ 30, 15 FPS; FOV 65 ± 3° (diagonal)
- focusing range - 30 cm to ∞

Depth sensor:

- resolution, frame rates (*FPS*), and *FOV*:
  - 480 x 270 (16:9) @ 30, 15, 6 FPS; FOV 72 ± 3° (diagonal)
  - 424 x 240 (16:9) @ 30, 15, 6 FPS; FOV 72 ± 3° (diagonal)
- minimum depth distance (min-Z) - 18 cm

Robot communications and network interfaces

The robot is made up of a number of devices. These devices contain Ethernet switches and are connected together in a network. There are three VLANS present for control, expansion/vision, and external connections.

The devices in the robot, from the *base* of the arm through the chain of actuators, to the interface module at the end of the arm, are daisy chained together using 41-pin flex cables which carry power and communications.

© 2025 Kinova inc. All rights reserved.

The base, actuators, and interface module each contain an Ethernet switch. The Ethernet port on the connector panel of the base controller allows an external computer to connect to the Ethernet switch of the base.

The Kinova vision module and any 3rd party tool that makes use of Ethernet communications user expansion pins in the interface connect directly to the interface module Ethernet switch. Other tools (for example any gripper interfacing using the 10-pin spring loaded connector on the interface) will interface instead with the interface module CPU (which is connected to the Ethernet switch).

Together, this enables dual Ethernet networks between all the devices (base, actuators, interface, Vision module, and *end effector* tools) with data carried between the base and interface over the 41-pin flex cables. This is accessible from a client computer via the 1 Gbps Ethernet port on the base controller connector panel.

The flex cables carry two distinct 100 Mbps Ethernet communications channels.

- one is for control and monitoring of actuators, interface module, and gripper (if present)
- the other is for data transmission for the vision module and expansion.

Each device connected to one of the Ethernet switches has an *Internet Protocol (IP)* address to allow routing of communications, transmitted using *User Datagram Protocol (UDP)*.

The actuators and interface module have the following default IP addresses:

Table 10: Actuator and gripper IP addresses

Device	IP address
Actuator 1	`10.10.0.10`
Actuator 2	`10.10.0.11`
Actuator 3	`10.10.0.12`
Actuator 4	`10.10.0.13`
Actuator 5	`10.10.0.14`
Actuator 6	`10.10.0.15`
Actuator 7 (for 7 DoF model)	`10.10.0.16`
Interface module	`10.10.0.17`

The expansion devices (Vision module and expansion tool peripherals) have the following IP addresses:

© 2025 Kinova inc. All rights reserved.

Table 11: Expansion IP addresses

Expansion Devices	IP address
Vision module	10.20.0.100
Expansion device	10.20.0.200/24*

The robot Ethernet network features three VLANs:

- *Virtual Local Area Network (VLAN)* 10 : control
- VLAN 20 : expansion
- VLAN 30 : external

The base has network interfaces to all three of these VLANs:

Table 12: Base network interface IP addresses

VLAN	IP address
CTRL interface IP address	10.10.0.1/24*
EXP interface IP address	10.20.0.1/24*
EXT interface IP address	192.168.1.10/24*

* *Classless Inter-Domain Routing (CIDR)* notation

The graphic below illustrates the topology of the networks.

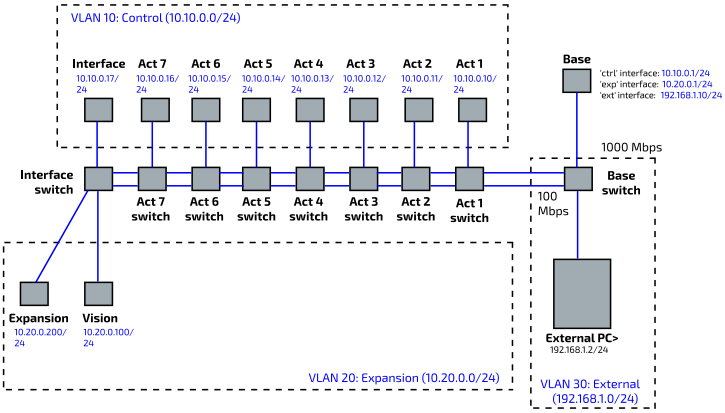

Figure 16: Networks diagram (7 DoF model shown)

© 2025 Kinova inc. All rights reserved.

Getting started

Overview

Overview of the getting started contents.

The pages that follow lead you through getting started with the robot. This includes:

- unboxing
- physically mounting the robot securely
- provisioning electrical power
- controlling the robot using an Xbox gamepad
- moving the robot in *admittance* using physical buttons
- connecting a computer to the robot
- connecting to the Kortex Web App

What's in the case?

Description of robot shipping case contents.

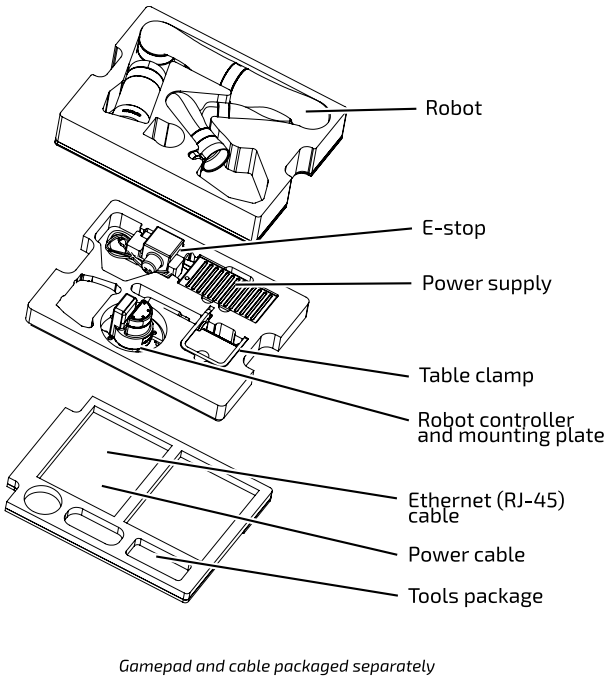

Figure 17: Gen3 Ultra lightweight robot shipping case contents (quick connect base option shown)

© 2025 Kinova inc. All rights reserved.

The shipping case contains the following contents.

At the top of the interior of the box, you will find the *Quick Start Guide*. The *Quick Start Guide* is a large printed visual guide.

The *Quick Start Guide* provides a handy reference for first steps, and should have you up and running within 30 minutes. Make sure to keep the *Quick Start Guide* as a reference for people in your team or organization getting newly acquainted with your robot. The *Quick Start Guide* is also available on the Kinova website.

The contents of the box are arranged in three layers from top to bottom. These packing layers can be removed from the box to unpack the contents.

In the top layer:

- Robot

In the second layer:

- Power adapter and cable with integrated emergency stop (E-stop) button
- Table clamp
- Mounting plate alone (fixed base option)
- Mounting plate with robot controller attached (quick connect base option)

The bottom area contains:

- Ethernet (RJ-45) cable
- Power cable
- Bag with useful tools and fasteners
  - hex keys: 3, 4 and 5 mm
  - M5 x 40 mm screws (quantity 4)

An Xbox gamepad and cable are shipped with the robot, but packaged separately.

There is also space for storage of papers and other items.

Note: The shipping case is also useful for transportation and storage of the robot. Make sure to save it and the packing layers within for future use.

© 2025 Kinova inc. All rights reserved.

Manipulating the robot joints when the robot is powered off

The robot joints can be manipulated by hand when the robot is powered off. This is useful when setting up the robot for the first time.

When the robot is powered on, the actuators will hold their *position* and prevent the *joints* from moving in response to external forces and torques. When the power is on, the arm will not move except when commanded. The arm joints are stiff and you will not be able to rotate the joints with your hands.

When the robot is powered off, as it is when you first receive the robot, the joints can be moved by hand slowly.

Note: The shoulder joint (joint 2) is more stiff than the others, but can still be moved.

This moveability of the joints when the robot is unpowered is useful when taking the robot out of the box and setting it up to get started. This lets you arrange the joints of the robot into a stable, balanced position prior to mounting and powering on the robot.

Robot mounting options

Overview of the physical mounting options for the robot.

The first step to getting started with the arm after unboxing is to physically mount the arm in a stable manner so that the robot can be connected and used.

The most basic mounting option uses the mounting plate and a table clamp to quickly mount the robot on a tabletop in a "right side up," vertical *orientation* on a flat horizontal surface. This allows for a quick, temporary installation allowing setup, light operations, and troubleshooting.

For more permanent installations, the robot can be mounted to a surface using screws.

Note that it is also possible to mount the robot in different orientations, depending on the needs of your particular application. The sections that follow will describe this in more detail.

© 2025 Kinova inc. All rights reserved.

Mounting the robot on a tabletop with mounting plate and table clamp

Describes the steps to mount the robot oriented vertically on the edge of a tabletop using a table clamp.

Before you begin

The robot should have the *joints* of the robot unfolded so that it is in a stable, balanced position ready for mounting. The mounting plate must be attached to the robot *base*.

- For the **quick connect base** option, the robot is shipped with the mounting plate already connected to the base controller.
- For the **fixed base** option, the robot is shipped without the mounting plate attached and it will need to be attached to the bottom of the base. See the base and mounting plate bolting patterns later in this section for more details.

For a robot with a fixed base, you will need a second person to help with some of the steps.

About this task

The robot is mounted to a tabletop using the base mounting plate and a table clamp.

Note: The table must be large and sturdy to support a tabletop edge mounting. If the table is too small or too flimsy, the weight of the robot at the table edge combined with the movement vibrations may render it unstable.

Note: The table clamp is only intended for light operations (low *payload*, low speed, low acceleration), quick demonstrations, and troubleshooting. Mounting using the table clamp may affect repeatability and accuracy, since the base may move from its original location due to force induced on the clamp from the back and forth manipulation of heavier payloads. For permanent installations involving medium / heavy duty manipulation, the base must be fixed securely to the mounting surface as described in Mounting the robot on a horizontal surface without the table clamp on page 31.

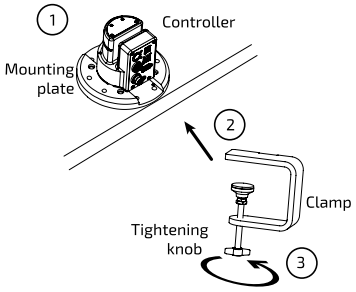

© 2025 Kinova inc. All rights reserved.

Procedure

1. Place the mounting plate with robot base attached on the tabletop, next to the edge.

   Note: You can place the robot base in one of two *orientations*. Either with the connector panel facing out toward the edge of the table, or with the front side of the base controller facing out.

   Note: For the robot with **fixed base**, one person will need to hold the robot upright on the table during this step and the next two steps while another person attaches the clamp.

2. Turn the tightening knob on the table clamp to open up the clamp and then slide the clamp into the slot between the mounting plate and the bottom of the base controller.
3. Turn the tightening knob by hand until the mounting plant is firmly clamped to the table top.

   Note: Do not over torque.

4. (**For robot with quick connect base**) Make sure that the quick connect clamp at the bottom of the robot base shell is opened. While holding the robot, you can now lower the base shell of the robot onto and over the quick connect controller.

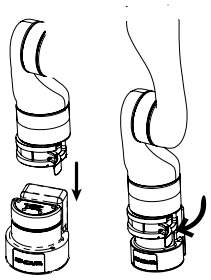

5. (**For robot with quick connect base**) Once the robot is fully lowered onto the quick connect controller, close the quick connect clamp to secure the robot in place on the quick connect controller.

   Note: The quick connect clamp must be properly closed to ensure stability of the robot. Damage can potentially be done to the robot if it is operated while unstable.

© 2025 Kinova inc. All rights reserved.

Results

The robot is now mounted on the tabletop.

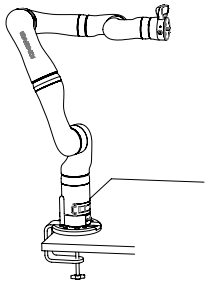

What to do next

You can now proceed to connect the robot to the power supply and E-stop.

© 2025 Kinova inc. All rights reserved.

Mounting the robot on a horizontal surface without the table clamp

Describes the steps to mount the robot on a horizontal surface without the table clamp, with or without the mounting plate.

Before you begin

The robot should have the *joints* of the robot unfolded so that it is in a stable, balanced position ready for mounting. If you want to use the mounting plate, the mounting plate will already need to be attached to the robot *base*.

- For the **quick connect base**, the robot is shipped with the mounting plate already connected to the base controller.
- For the **fixed base**, the robot is shipped without the mounting plate attached and it will need to be attached to the bottom of the base. See the base and mounting plate bolting patterns later in this section for more details.

For a robot with a fixed base, you will need a second person to help with the procedure.

About this task

Here, we describe mounting the robot in a vertical *orientation* on a flat, horizontal surface, affixing either the mounting plate or the base to the surface using screws and sunk holes in the surface. This provides for a much more stable and robust permanent mounting option compared to using the table clamp, and is the option to use for precision and safety if you want to operate the robot at high speeds and with high *payload*s.

Procedure

1. Choose whether to mount the robot base directly onto the surface, or whether to use the mounting plate.
2. Using either the mounting plate bolting pattern or the controller bolting pattern or as a guide, drill holes into the surface. If the base is to be mounted directly to the surface, the holes will have to be drilled all the way through the mounting surface.
3. Place the robot base (with mounting plate, if applicable) onto the table. Carefully line up the holes drilled in the surface with the holes on the mounting plate or the underside of the robot base, as applicable.

   Note: For the robot with **fixed base**, one person will need to hold the robot upright on the table during this step and the next step while another checks the positioning and fixes the robot base in place.

© 2025 Kinova inc. All rights reserved.

4. Use appropriate screws to fix either the base or the mounting plate to the surface. If the base is mounted directly, the screws will need to go through the mounting surface from the other side.
5. (**For robot with quick connect base**) Make sure that the quick connect clamp at the bottom of the robot base shell is opened. While holding the robot, you can now lower the base shell of the robot onto and over the quick connect controller.

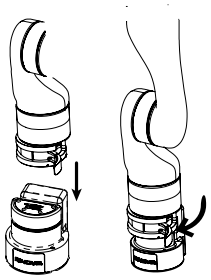

6. (**For robot with quick connect base**) Once the robot is fully lowered onto the quick connect controller, close the quick connect clamp to secure the robot in place on the quick connect controller.

Note: The quick connect clamp must be properly closed to ensure stability of the robot. Damage can potentially be done to the robot if it is operated while unstable.

Mounting plate bolting pattern

Describes the bolting pattern of the mounting plate. This is useful when mounting the robot to a surface using the mounting plate.

Overview

The mounting plate can be attached to the robot *base* using four M6 x 30 socket head cap screws passing through the bottom of the mounting plate into corresponding holes in the bottom of the base. The mounting plate has two sets of M8 screw holes (4 holes) and one set of counter-sunk M6 screw holes (4 holes) available for affixing the mounting plate to a surface.

© 2025 Kinova inc. All rights reserved.

Mounting details

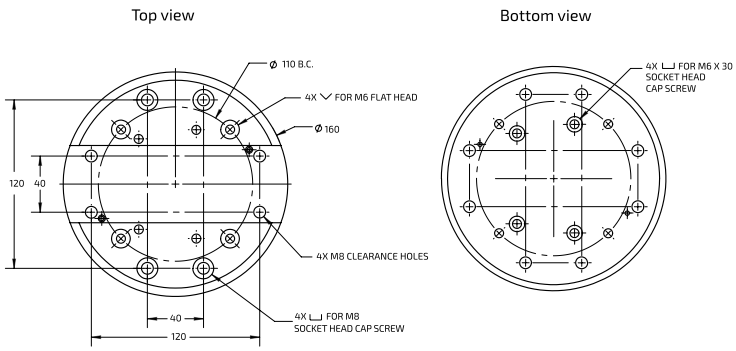

Figure 18: Mounting plate bolting pattern

Base mounting interface bolting pattern

Describes the bolting pattern on the mounting interface on the underside of the base. This is useful when you want to affix the robot base directly to a surface.

Overview

The underside of the *base* has a mounting interface with four M6 screw holes for mounting purposes. These holes are used for attaching the mounting plate to the base. When the mounting plate is removed, these holes can be used for mounting the base directly to a surface. In that case, holes must be drilled through the surface so that screws can go through from the other side and into the base mounting holes from underneath.

Mounting interface details

Note: The pattern of the mounting interface is the same for both quick connect and fixed base options. However, for the quick connect base option, one of the screw holes in the base (front left) features an inset locking screw. Turning the locking screw clockwise to the end of its travel (using a 3 mm hex key) while the base shell is clamped to the quick connect controller will lock the two together and prevent the clamp from being opened.

Note: Two of the mounting holes can optionally be used with shoulder screws. This allows the robot to be mounted and dismounted with a more repeatable positioning.

© 2025 Kinova inc. All rights reserved.

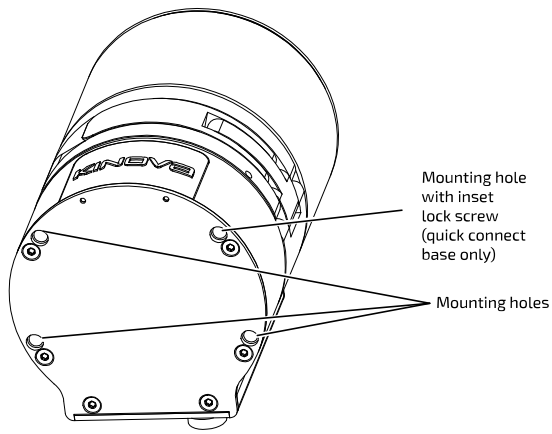

Figure 19: Base mounting interface holes (quick connect base shown)

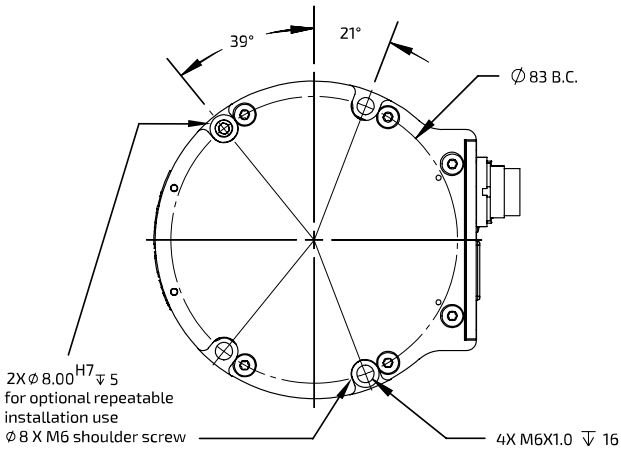

Figure 20: Base mounting interface holes pattern

Mounting the robot on a wall or ceiling

Describes how to mount the robot on a wall or ceiling.

The procedure for mounting is generally similar to that of mounting onto a horizontal surface:

1. Choose whether to mount the controller directly to the surface, or using the mounting plate.
2. Drill holes in an appropriate pattern in the surface based on the appropriate bolting pattern diagram.
3. Affix the controller or mounting plate to the surface with appropriate screws.

There are however important differences.

Follow all special considerations for wall and ceiling mounting. Perform a careful analysis of the proposed mounting surface. Also, if your robot has a standard quick connect *base*, make sure to mount and clamp the base shell onto the quick connect controller with the locking screw

© 2025 Kinova inc. All rights reserved.

engaged before mounting the robot on the surface. The details of this are described in the following sections.

Special considerations for wall and ceiling mounts

Describes special considerations that are important for wall and ceiling mounting of the robot.

For safety reasons, there are special preparations and steps that need to be undertaken before mounting the robot on a wall or ceiling.

Warning: Before trying to mount the arm on a wall or ceiling, perform a comprehensive analysis of weight, torque, and vibrations and ensure the material of the mounting surface structure is stable enough.

Warning: If the robot uses a quick connect *base*, the locking screw on the bottom left front of the controller must be screwed in fully with a hex key while the base shell is clamped on. This will prevent the quick connect clamp from being opened while the arm is mounted on a wall or ceiling, and provides an added measure of security. The robot therefore needs to be clamped to the base controller and the lock screw must be adjusted before trying to mount the robot to the surface.

Warning: For wall mounting, the robot needs to be mounted with the controller connector panel **facing downwards**. This is to prevent water ingress at the connector panel.

Warning: In a wall or ceiling mount, the *gravity vector* will have a different *orientation* than usual with respect to the base reference *frame*. It will be necessary to set the gravity vector using the Kortex Web App or *API*.

Note: A robot mounted in a ceiling mount is **not** certified for ingress protection.

Note: The Cartesian control of the robot is in relation to the base reference frame, which will be rotated relative to the natural reference frame of the perspective of the user / operator. You will need to apply the appropriate coordinate transformations to control the robot in these orientations.

© 2025 Kinova inc. All rights reserved.

Adjusting the locking screw to secure the base clamp (quick connect base only)

Describes steps for adjusting the base locking screw of the quick connect base. The locking screw is used for securing the clamp on the base. This increases safety in wall and ceiling mountings.

Before you begin

You will need a 3 mm hex key.

About this task

Adjusting the locking screw while the base shell is attached and clamped locks the clamp shut and prevents it from being inadvertently opened. This improves the safety of the robot when mounted on a wall or ceiling.

Note: This procedure only applies in the case of the standard quick connect base.

Procedure

1. If the mounting plate is attached to the controller, one of the screws connecting the mounting plate to the controller from below has to be removed to get at the locking screw. Identify the mounting hole with the lock screw and remove it using the 3 mm hex key.

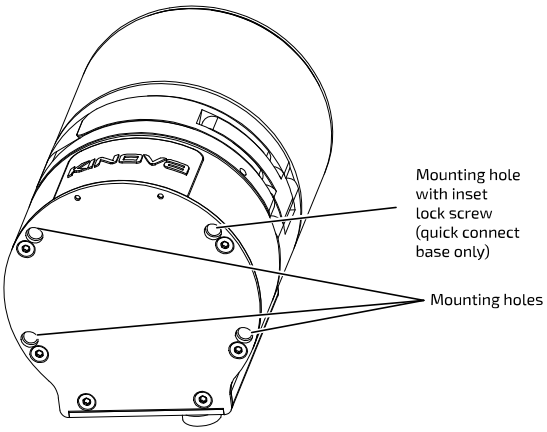

2. If the base shell and the robot are not already installed onto the quick connect controller, slide the base shell onto the controller and close the clamp.

© 2025 Kinova inc. All rights reserved.

3. Using the same hex key, insert the end of the key into the mounting hole until the hex key engages with the head of the lock screw. Turn the lock screw until it stops at the end of its travel. There is a hole on the front of the clamp where the end of the lock screw can be seen when the lock screw is engaged with the clamp mechanism. Confirm that you can see the screw.

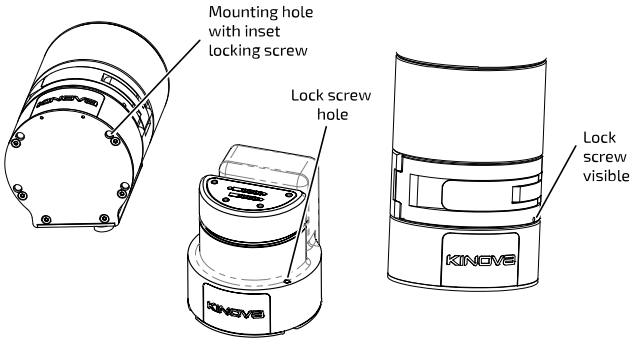

4. Test the clamp to ensure that you can not open it.

Robot power adapter and E-stop

The robot comes with a power adapter and cable to supply the robot with power from a wall outlet. The cable includes an integrated E-stop.

The power adapter allows power to be supplied to the robot using a wall outlet as a source. The cable from the power adapter connects to the power connector on the *base* controller using a Lumberg 0322 08 connector.

The cable from the power adapter to the robot includes an integrated push-button E-stop connected in series. The E-stop allows users to shut down the robot quickly in case of an emergency.

To engage the E-stop, press down on the red button on top of the E-stop. This will cut the power to the robot, causing it to shut it down.

DANGER: When the power is cut, the robot descends. There are mechanisms within the actuators to slow the fall of the arm for safety purposes. Hold the robot as it falls whenever possible.

To disengage the E-stop, rotate the button clockwise until it pops up.

Important: All Gen3 Ultra lightweight robots with brake configuration are obsolete; they are not sold. Clients who have bought Gen3 Ultra lightweight robots with brake configuration are supported.

© 2025 Kinova inc. All rights reserved.

Refer to *Kinova® Gen3 Ultra lightweight robot user guide r9.2* in the Kinova Artifactory archives for information related to brakes.

Powering robot from a battery via a custom wiring harness

This section describes how to provide power to the robot from a battery using a custom wiring harness.

The most straightforward way to supply power to the robot is using the supplied power adapter and cable to feed the robot from a nearby electrical outlet. This is the **recommended solution** for robot power supply **for the vast majority of users**.

In some applications, however, for example, for integration of the robot with a mobile platform, a wall outlet will not be feasible as a source of power, and users will want to supply the robot with power from a battery (24 V battery required).

Warning: The following information is intended for advanced users only.

Warning: Certification of the robot is under the assumption of power supply from a wall outlet using the supplied power adapter. Use of a battery as power source may result in departure from these standards. If you have a wall outlet available, use it as a power source.

Warning: Powering the robot using a battery power supply is done at the user's risk, and Kinova is not responsible for any damage that might occur. We recommend that users contact Kinova technical support for any questions related to powering the robot with a battery source.

For those who want to explore this option and understand the risks involved, Kinova provides (sold separately) a power cable (p/n KR32222HAR) to connect the robot to a battery. The details are as follows:

© 2025 Kinova inc. All rights reserved.

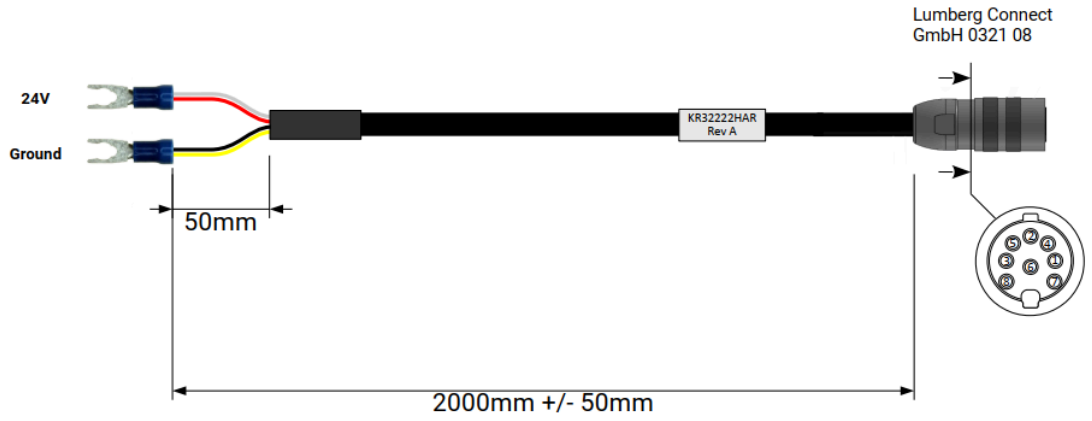

Figure 21: KR32222HAR power cable

Table 13: KR32222HAR cable pinout

#	Signal	Wire color
1	24V_INPUT	Red
2	24V_RETURN	Black
3	N/C	No connection
4	24V_RETURN	Yellow
5	N/C	No connection
6	N/C	No connection
7	24V_INPUT	White
8	N/C	No connection

© 2025 Kinova inc. All rights reserved.

Powering on the robot

Describes steps to connect the robot to an electrical power source and power on the robot.

About this task

The robot is powered by a 24 V power supply (P/N DTM300PW240D2).

Procedure

1. Connect the captive cable from the power supply to the circular Lumberg connector on the rear connector panel in the controller of the robot, rotating the outer cylindrical locking shell of the connector until it is just tight enough to secure the connector.
2. Plug the power supply into a wall outlet.
3. Push the power button and hold in for 3 seconds to power up the robot. This will initiate the power up sequence.

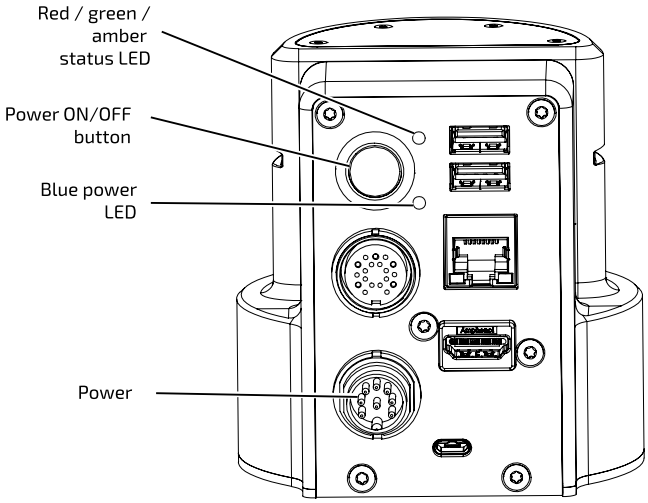

Note: When the robot is properly powered on, the blue power *LED* will be illuminated green.

Note: Do NOT hold the power button down for too long. Holding the button for 10 seconds will result in a factory reset.

© 2025 Kinova inc. All rights reserved.

Powering on a robot configured with automatic start up

The Base One Piece - Automatic Power On variant of Gen3 Ultra lightweight robot is configured to start as soon as it receives electrical power.

About this task

The robot is powered by a 24 V power supply (P/N DTM300PW240D2).

Procedure

1. Connect the captive cable from the power supply to the circular Lumberg connector on the rear connector panel in the controller of the robot, rotating the outer cylindrical locking shell of the connector until it is just tight enough to secure the connector.
2. Plug the power supply into a wall outlet.

Important: The button that looks like an ON/OFF button is a dummy button. Pressing it has no effect on switching on the robot.

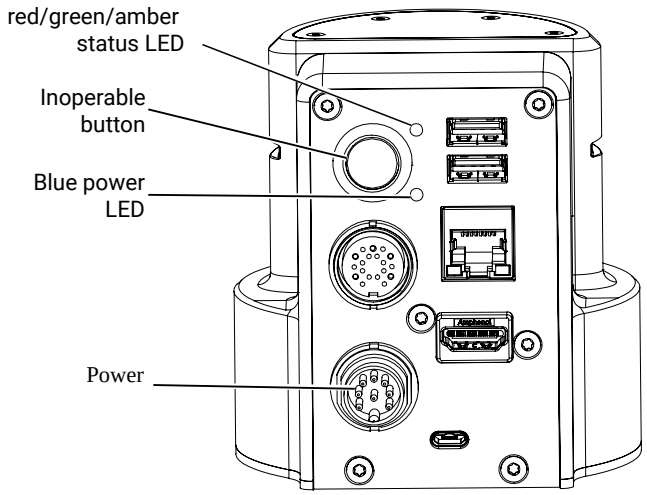

The blue power *LED* illuminates green. The robot receives electrical power, which initiates the power-up sequence.

Power-up, booting, and initialization sequence

The *LED* indications on the *base* give visual feedback during the power-up sequence.

The base LEDs will provide visual feedback as to the progress through the sequence, as follows:

© 2025 Kinova inc. All rights reserved.

Table 14: Power-up sequence LEDs indications

Sequence step	LEDs indications
System booting	• Blue power LED, blinking • Status LED, off
System initializing	• Blue power LED, solid • Status LED, amber, solid
System operating normally	• Blue power LED, off • Status LED, green, solid

From start to finish, the process should take no more than 30 seconds, except during a firmware update.

© 2025 Kinova inc. All rights reserved.

Resetting the robot to factory settings

The robot can be reset to factory settings using the following steps. This returns the robot to the state it was in when first received.

About this task

At some point you may find it useful or necessary to roll back configurations on the robot to factory defaults. This will return the robot to the state it was in when you received the robot.

Note: This procedure describes how to reset the robot to *factory settings* using the robot hardware power button. You can also reset the robot to factory settings on the Kortex Web App **Robot Configurations** page.

Note: This procedure assumes you are starting with the robot powered on. If the robot is already powered off, you can start at step 3.

Note: Be sure that this is what you want to do. This will erase all user-defined configurations including *protection zones*, network settings, actions, user profiles, and so on.

Procedure

1. Place the robot in a stable *position*.
2. Press and hold the base power button to power off the robot.
3. Press and hold the power button **for 10 seconds**.
   The green status *LED* will go on to confirm the factory reset.
4. Release the power button.
   The robot will then boot with factory default configuration settings.

© 2025 Kinova inc. All rights reserved.

Restore factory settings on an automatic-powered robot

The robot can be reset to factory settings using the following steps. This returns the robot to the state it was in when first received.

About this task

At some point you may find it useful or necessary to roll back configurations on the robot to factory defaults. This returns the robot to the state it was in when you received the robot.

Important: Be sure that this is what you want to do. A factory reset erases all user-defined configurations, including *protection zones*, network settings, actions, *user profiles*, and so on.

Use Kortex Web App to restore *factory settings*.

Procedure

1. Take note whether Wi-Fi is enabled or disabled.
2. Take note whether Bluetooth is enabled or disabled.
3. Click **Configurations** > **Robot** > **Arm** > **Base**.
4. Scroll down to **Restore Factory Settings**.
5. Click **RESTORE**.

Results

The factory settings are restored to the robot.

Important: Wi-Fi and Bluetooth are enabled by default. Best practice is to make sure Wi-Fi and Bluetooth communication is set to what it was before the return to factory settings.

Important: If you lose your Kortex Web App credentials after restoring to factory settings, please contact support@kinovarobotics.com.

© 2025 Kinova inc. All rights reserved.

Resetting to factory settings with a USB

It may be useful or necessary to roll back configurations on the robot to the state it was in when it was built by using a *USB*.

Before you begin

Have a *USB* drive.

About this task

Use the USB method when the Kortex Web App credentials are lost and it is not possible to hold down the power button.

Important: Be sure that this is what you want to do. A factory reset erases all user-defined configurations, including *protection zone*s, network settings, *actions*, *user profiles*, and so on.

Procedure

1. Create a file called `restore` on the USB drive.

   Restriction: Do not add an extension to the name of the file.

2. Insert the USB drive in one of the USB ports on the robot.
3. Switch on the robot.

Results

The settings of the robot are the same as the *factory settings*.

Operating the robot

Overview of operating the robot

This section describes the supported control devices for the robot.

There are three ways to operate the robot:

- physical gamepad (Xbox controller)
- virtual joysticks over a network connection (Kortex Web App with virtual joysticks)
- programmatically (Kortex™ *API*)

© 2025 Kinova inc. All rights reserved.

Supported control devices

This section describes the supported control devices for the robot.

The robot currently supports the Xbox gamepad (*USB* wired connection only).

The wrist buttons on the robot can also be mapped to functionalities.

© 2025 Kinova inc. All rights reserved.

Connecting an Xbox gamepad to the robot

This section describes how to connect an Xbox gamepad to the robot.

Before you begin

You will need:

- Xbox gamepad
- micro-B *USB* to USB type-A cable (included)

About this task

An Xbox gamepad can be used to operate the robot.

Note: The robot currently only supports a wired connection for the gamepad.

Procedure

1. Connect the micro-B USB connector plug of the cable into the micro USB port on the Xbox gamepad.
2. Connect the USB type-A end of the cable into one of the two USB-A connectors on the *base* controller of the robot.

Default control device mapping - Xbox gamepad

This section describes the default control device mappings between the Xbox gamepad and the actions on the robot. Customize the mapping between the gamepad and the robot using the *API* or Kortex Web App.

Gamepad maps overview

The robot has three default control maps for the Xbox gamepad.

1. Twist linear (controls the robot *end effector* translations by velocity)
2. Twist angular (controls the robot end effector rotations by velocity)
3. Joint (controls the robot *joint* by joint by velocity)

General controls

Some controls apply the same across all maps. These are controls for:

- Changing the active control *map* to the next or previous map in the list
- Opening and closing the gripper (if gripper is mounted)
- Clearing faults or E-Stop - a fault state or the triggering of an E-Stop signal will make itself known through a red *LED* on the *base* controller of the robot. The robot cannot be moved this if

© 2025 Kinova inc. All rights reserved.

state is present. Pressing the left bumper clears the fault (removes the E-Stop) and returns the LED to green, returning normal control.

- Applying emergency stop signal - this will stop the robot. As with a fault, the LED will change to red and control of the robot will be prevented until this state is cleared.
- Reaching home or retract position

The available control maps are in a sequential list, starting with **Twist linear** and ending with **Joint**. Pressing the View or Menu buttons will cause the active control map to switch to the previous or next control map on the list. The list can be thought of as circular - selecting previous when on the first map will cycle around to the last map, and conversely, selecting the next map when on the last map will cycle around to the first.

Table 15: General control map elements (common controls applying to ALL maps)

Action		Control	
Reach defined *pose*	Retract pose	A (hold down)	button
	Home pose	B (hold down)	
Navigate controller maps	previous	View button	
	next	Menu button	
Gripper command	close	Left	trigger
	open	Right	
Clear fault		Left	bumper
Stop robot		Right	

© 2025 Kinova inc. All rights reserved.

1	Clear fault
2	Gripper close
3	Previous control map
4	Next control map
5	Gripper open
6	Stop
7	Hold to reach Home pose
8	Hold to reach Retract pose

Figure 22: General control map elements with Xbox gamepad

Twist linear map

Twist linear is the default gamepad *map* when the robot is turned on and the controller is connected. In this mode the *tool* is translated in space with respect to the configured Cartesian translation *frame* (by default the *base frame*). The tool *orientation* does not change in this map. The user controls the linear velocity of the tool, including the linear speed.

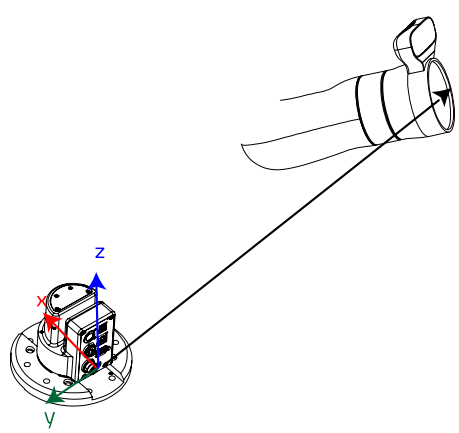

© 2025 Kinova inc. All rights reserved.

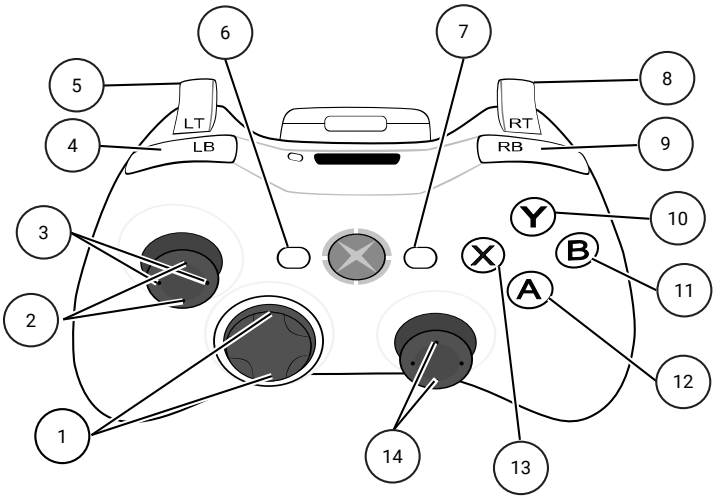

Figure 23: Twist linear controls with Xbox gamepad

1	Speed +/-
2	X translation
3	Y translation
4	Clear fault
5	Gripper close
6	Previous control map
7	Next control map
8	Gripper open
9	Apply soft e-stop
10	Toggle nullspace admittance
11	Hold to reach Home pose
12	Hold to reach Retract pose
13	Toggle Cartesian admittance
14	Z translation

Twist angular map

The twist angular map is used to change the orientation of the gripper/tool without translating the gripper/tool.

Twist angular can be thought of as a companion to the Twist linear control map. In Twist linear, the *tool* is translated with respect to the configured Cartesian translation frame while leaving the *orientation* unchanged. In Twist angular, the control is pure rotation of the tool within the configured Cartesian orientation frame (by default the tool reference *frame*), around the three axes of that frame. The user controls the angular velocity of the tool in relation to those three axes.

© 2025 Kinova inc. All rights reserved.

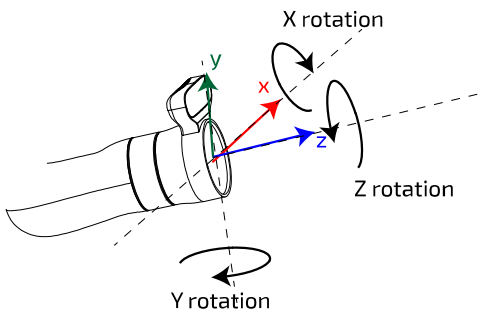

Twist linear and Twist angular together specify a twist (consisting of three linear velocity terms and three angular velocity terms) to be applied to the end effector (Cartesian control).

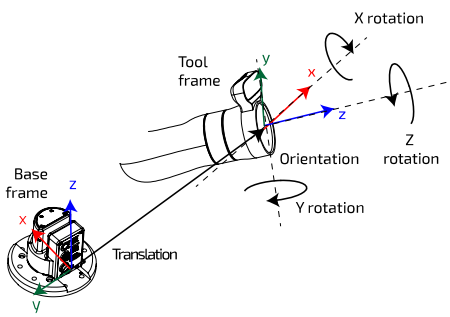

Table 16: Twist angular - general controls plus

Action		Control	
Toggle admittance	Cartesian	X	button
	Nullspace	Y	
Cartesian Y rotation	-	left	L stick
	+	right	
Cartesian X rotation	-	down	
	+	up	
Cartesian Z rotation	-	left	R stick
	+	right	

© 2025 Kinova inc. All rights reserved.

Action		Control	
Speed	decrease	down	D-pad
	increase	up	

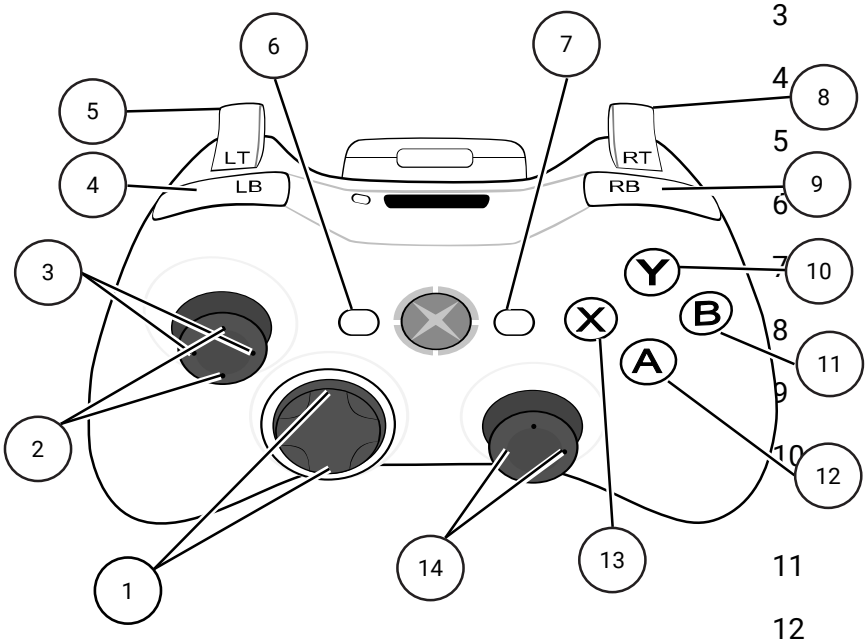

1 Speed +/-
2 X rotation
3 Y rotation
4 Clear fault
5 Gripper close
6 Previous control map
7 Next control map
8 Gripper open
9 Apply soft e-stop
10 Toggle nullspace admittance
11 Hold to reach Home pose
12 Hold to reach Retract pose
13 Toggle Cartesian admittance
14 Z rotation

Figure 24: Twist angular controls with Xbox gamepad

Joint map

The joint map allows actuators to be chosen and moved one by one.

Joint control offers direct control of the rotational movement of the *joint* actuators. In this mode you can toggle through the joints (actuators) one by one, starting with the first and going through in increasing order. On reaching the last actuator, it will then cycle back to the first. The joint angular speed (ω) can be controlled.

Table 17: Joint - general controls plus:

Action		Control	
Toggle admittance	Joint	X	button

© 2025 Kinova inc. All rights reserved.

Action		Control	
Joint speed	ω-	left	L stick
	ω+	right	
Speed	increase	up	D-pad
	decrease	down	
Navigate joints	Previous	left	
	Next	right	

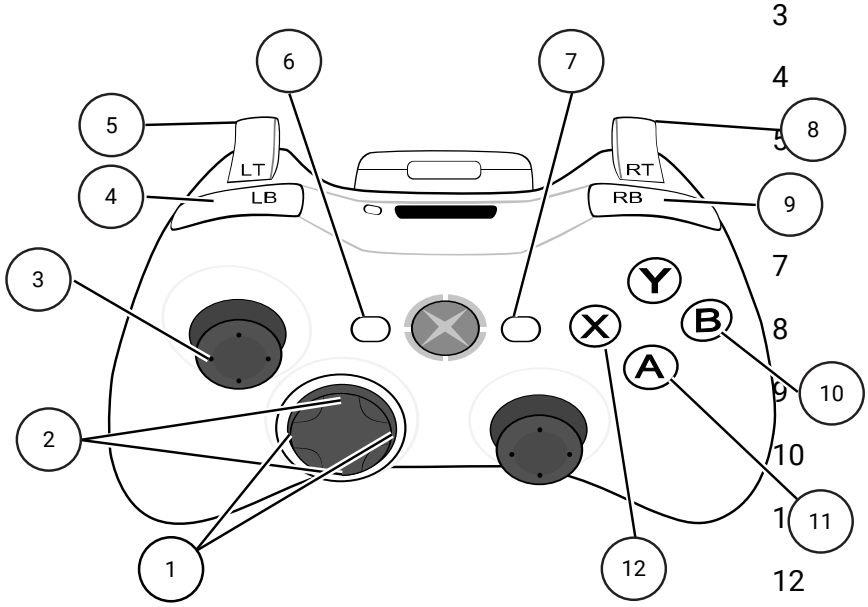

1 Previous/next joint
2 Speed +/-
3 Joint speeds
4 Clear fault
5 Gripper close
9 Previous control map
7 Next control map
8 Gripper open
9 Apply soft e-stop
10 Reach Home pose
1 Reach Retract pose
12 Toggle Joint admittance

Figure 25: Joint controls with Xbox gamepad

Home and retract positions

Preconfigured Xbox gamepad maps set aside two buttons to move the robot to the home and retract positions of the robot.

The robot includes two preconfigured *poses* that can be reached using the Xbox gamepad.

© 2025 Kinova inc. All rights reserved.

The **home** position sets the robot into a convenient "ready" *position*. The home position is reached by holding down the **B** button on the Xbox gamepad.

The **retract** position folds the robot up into a compact pose. This can be a useful position to out the robot into for periods when it will not be in use. The retract position is reached by holding down the **A** button on the Xbox gamepad.

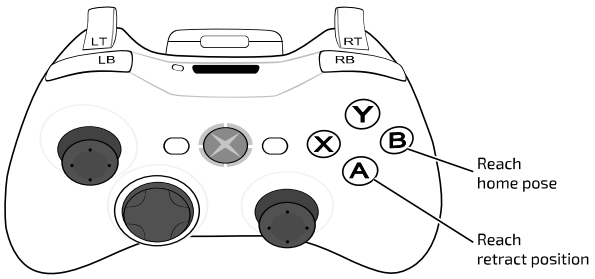

Figure 26: Reach home and retract controls

Putting the robot into admittance using the interface buttons

The wrist buttons on the sides of the interface module can be used to put the robot into admittance modes. Three different admittance modes are accessible, depending on the buttons used.

The interface module has two buttons on its side that by default can be used to temporarily put the robot into *admittance*. This can be a convenient way to take a hold of the robot and move it into a desired *position*, or to explore the flexibility of the robot at a particular position.

The two interface module buttons each offer access to one admittance mode.

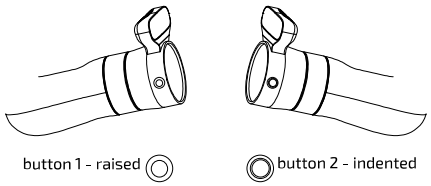

Figure 27: Interface module admittance buttons

Button 1 (◎) has a raised solid circle shape. This button by itself is used to activate **Cartesian admittance**, in which the *end effector* of the robot moves in response to force exerted on it.

Button 2 (◎) has an indented or ring shape. This button by itself is used to activate **joint admittance**, in which the *joints* of the robot rotate freely in response to forces exerted on them.

For the 7 DoF model, button 1 and button 2 can be used together (◎ + ◎) to activate **null space admittance**. In this mode the end effector stays in a fixed position and *orientation*, while the other joints move within the *null space* available at the given end effector (seven degrees of freedom

© 2025 Kinova inc. All rights reserved.

to specify six coordinates of position and orientation gives a free degree of liberty to move within different solutions of the inverse kinematics of a given *pose*).

Note: Since the 6 DoF robot model does not have this redundant *degree of freedom*, *null space admittance* is not supported on the 6 DoF model.

Table 18: Wrist button admittance modes map

Button	Effect
button 1	enter Cartesian admittance
button 2	enter joint admittance
button 1 + button 2	enter null space admittance (**7 DoF robot only**)

To engage one of the admittance modes, hold down the appropriate button(s) and exert a moderate amount of force on the robot. The robot will be in admittance mode as long as the button is held down. When the button is released, the robot will no longer be in admittance mode and will return to the previously engaged control mode.

Connecting a computer to the robot

Connection options

The robot can be connected to a computer via either wired Ethernet or Wi-Fi. Wired connections can be point to point or over a small local area network.

There are a few ways to connect a computer to the robot arm:

- Ethernet (direct or over a local network)
- Wi-Fi
- Bluetooth

Note: These two methods use two separate Ethernet interfaces in the robot *base*. As a result, the *Ingress Protection (IP)* address used to connect to the base will depend on the interface used.

© 2025 Kinova inc. All rights reserved.

Connecting a computer to the robot via Ethernet (for the first time)

Describes the steps to connect a computer to the robot via a wired connection for the first time. This procedure requires some configuration of the computer's network adapter.

About this task

This procedure is required to connect a computer to the computer for the first time via a wired Ethernet connection. This requires some configuration of the computer. The following procedure describes details for Windows 10. The details will be somewhat different for other OS platforms, but the high level steps will be the same.

Procedure

1. Connect an RJ-45 Ethernet cable from your computer's wired network adapter to the base Ethernet port.

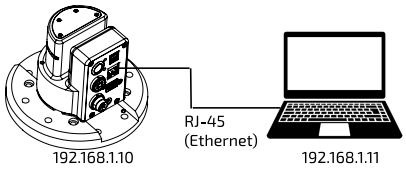

2. On your computer, open **Control Panel** > **Network and Internet** > **Network and Sharing Center**

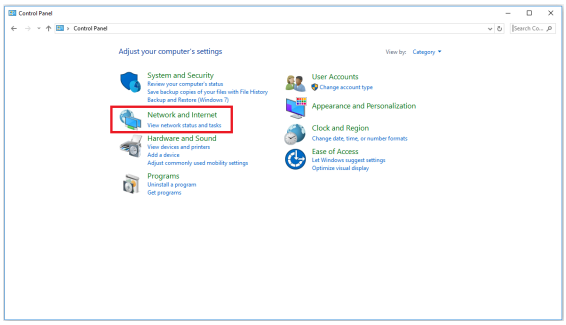

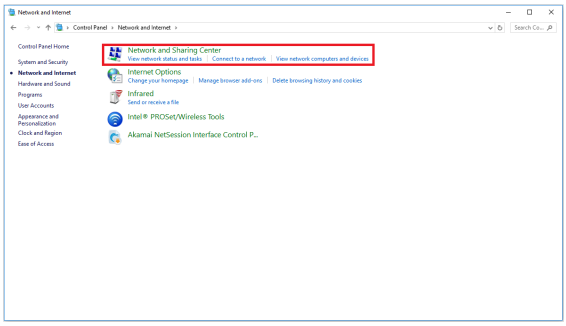

© 2025 Kinova inc. All rights reserved.

3. Select **Change adapter settings**

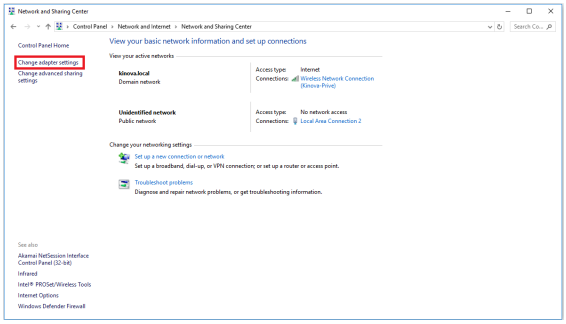

4. Select wired Ethernet adapter (that is, **Local Area Connection**) and choose **Properties**.
5. Select **Internet Protocol Version 4 (*TCP/IP* v4)** and choose **Properties**.

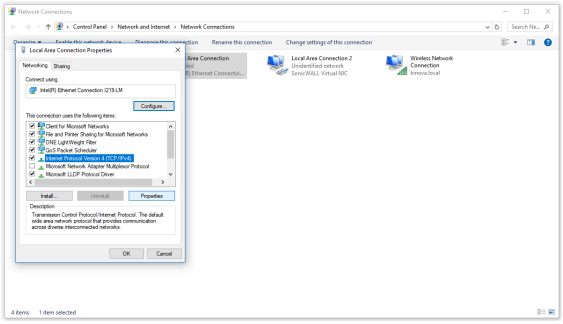

6. Select **Use the following *IP* address** and enter IPv4 address and the Subnet mask.
   IPv4 address is `192.168.1.XX`, where XX is another from 11 and larger. Subnet mask is `255.255.255.0`

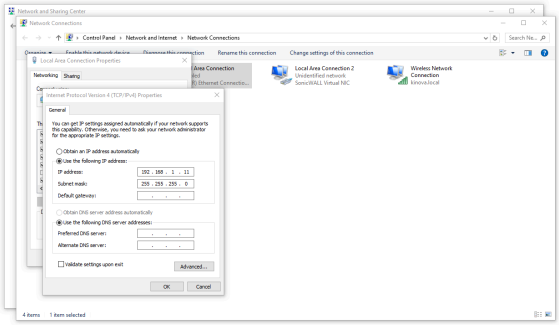

7. Press OK.

Results

Your computer is now connected physically to the robot and ready to communicate.

What to do next

You can now access the Kortex Web App.

© 2025 Kinova inc. All rights reserved.

Kinova® Kortex™ Kortex Web App

Use Kortex Web App to interact with the robot and perform basic tasks without using programming commands.

The Kortex Web App provides a HTML Web browser based GUI to interact with the arm and perform basic tasks without using programming commands.

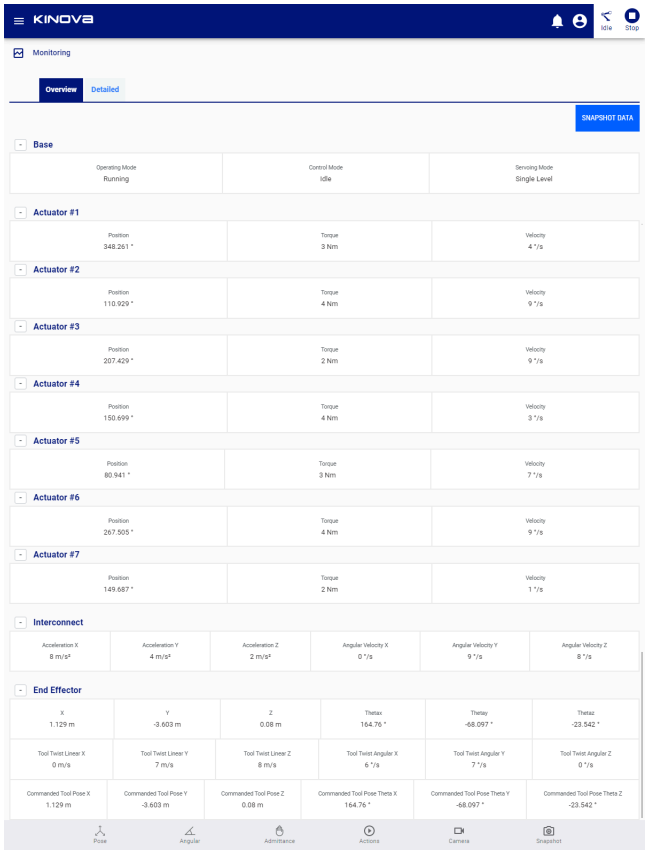

Kortex Web App allows users to control and configure the robot via the GUI.

This includes:

- Real-time control of the robot in different modes using different virtual joysticks
- Setting the arm into admittance modes to manipulate the arm using external forces / torques
- Viewing the feed from the Vision module color sensor
- Configuring
  - robot performance parameters and safety thresholds
  - protection zones
  - network settings
  - backup management
  - *user profiles*
- Reading

© 2025 Kinova inc. All rights reserved.

  - system information
  - notifications
- Defining robot *poses* and *trajectories*
- Managing control *mappings* for physical controllers
- Monitoring robot parameters
- Upgrading the robot firmware

The Kortex Web App can be run from a desktop or laptop *personal computer (PC)* connected by wired connection to the robot, or from any device on the same local network. Devices include desktops, laptops, smartphones, and tablets. The local network type includes local Wi-Fi networks.

The Kortex Web App is described in detail in the Kinova® Kortex™ Kortex Web App User Guide section.

© 2025 Kinova inc. All rights reserved.

Accessing the Kinova® Kortex™ Kortex Web App

This section describes how to launch the Kortex Web App.

Before you begin

You should be using a computer that is connected to the robot either over a wired (direct or over local area network) or wireless connection and you should have the *IP* address of the robot on the network over which you are connected.

About this task

Procedure

1. From the computer web browser, enter the appropriate IP address for the arm *base* to access the Kortex Web App.

   Note: By default, the IP address to use here is:

   - `192.168.1.10`

   If you have configured the robot with a different IP address so that the computer and robot are both connected to the same local area network, whether wired or over Wi-Fi, use the newly configured IP address.

2. If the connection between the arm and computer is configured correctly, the Web application should launch and present a login window. In the login window, enter the following credentials:

   Note: By default, the username-password pair is admin/admin.

3. Click CONNECT. The application will initialize. If all is successful, the application will open to a Monitoring screen that displays live parameters for the robot.

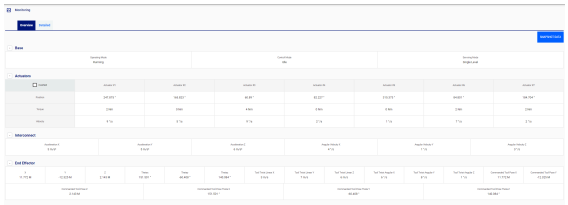

Teaching mode

Teaching mode provides a way to build sequences of robot movements by moving the robot by hand using a combination of the Kortex Web App and the wrist buttons on the interface module.

Teaching Mode support provides a user-friendly interface to build sequences by moving the robot by hand using *admittance* modes and capturing *pose*, *joint*, and gripper *snapshots*. This sequence can be edited and configured.

© 2025 Kinova inc. All rights reserved.

This is done using a combination of the Kortex Web App **Actions** page and the wrist buttons on the interface module.

Teaching mode is entered using the Kortex Web App. Entering teaching mode changes the map of the wrist buttons so that the buttons can be used to capture snapshots.

For more details, see the Kortex Web App **Actions** page documentation.

© 2025 Kinova inc. All rights reserved.

Changing the robot wired connection *IP* address and connecting the robot to a LAN

Describes steps to change the robot's wired connection IP address and connect the robot to a local area network (LAN).

Before you begin

You need to have already to your computer via Ethernet cable and the computer's local network adapter port. You will need information about the available IP addresses on the local area network (LAN) to which you want to connect the robot.

About this task

This procedure is used to configure the robot so that you can connect a computer to the robot remotely over your local area network.

Note: For security reasons, we do not recommend connecting the robot to a WAN. The network should be a simple local area network with low traffic.

Procedure

1. Open the Web application and go to the **Networks** page. Open the **Ethernet** tab.
2. Modify the IPv4 address, IPv4 subnet mask, and IPv4 gateway to match an available IP address with the IP address range of your network.

   Note: Once you modify the robot network parameters, your client computer will lose connection with the robotic arm.
3. Physically disconnect the robot from your computer and connect it via Ethernet cable to your LAN at a network switch.
4. Restore IP settings compatible with the LAN on your computer's local network adapter and connect your computer physically to the LAN.
5. From your computer, ping the robot at its newly configured robot IP address to confirm that communication is established.

What to do next

From your computer web browser, enter the new robot IP address to access the Kortex Web App.

© 2025 Kinova inc. All rights reserved.

Connecting a computer to the robot via Wi-Fi

This section describes how to connect a computer to the robot via Wi-Fi.

Before you begin

You will need to have a wired connection between the computer and robot prior to carrying out this procedure. The Wi-Fi router will need to be set to broadcast its *Service Set Identifier (SSID)* so that the robot can find the network. The router will also need to be configured to accept new devices. You will also need the Wi-Fi password.

About this task

The robot features an integrated Wi-Fi adapter. This allows the arm to connect to a local Wi-Fi connection. Once this connection is established, other devices on the same Wi-Fi network can then connect to the robot wirelessly using the *IP* address assigned for the robot on the wireless network.

Procedure

1. On a computer connected to the robot via wired Ethernet, open the Kortex Web App and connect to the robot.
2. Under the **Configurations** page group, select **Wireless & Networks** in the main navigation panel of the Kortex Web App to go to the **Wireless & Networks** page.
3. Once on the page, select the **Wi-Fi** tab.
4. The **Wi-Fi tab** will list all of the detected Wi-Fi networks. Choose one of the networks, and click the corresponding **Connect** text button.

   Note: It is **not** recommended to connect to Wi-Fi networks which are potentially insecure. Security settings of at least WPA2 are recommended.

5. A pop-up window will appear to sign in to the network, with information about the signal strength and security settings. Enter the password for the network and click the **CONNECT** button.

   Note: A **Connect Automatically** toggle is available here. Toggling this on will allow the robot *base* to automatically connect to the wireless network using the previously entered password whenever the robot is powered on.

6. Take note of the wireless network IPv4 address that the robot obtains after clicking the **CONNECT** button.
7. On any wireless device (laptop, tablet, smartphone) connected to the same Wi-Fi network, open a Web browser and type the IP address that the robot obtained at Step 6 (This address corresponds to the robot's address on the Wi-Fi network).

© 2025 Kinova inc. All rights reserved.

8. The Kortex Web App login screen will appear. At the login screen, enter the appropriate user name and password, and click the CONNECT button.

Results

You are now connected to the Kortex Web App through the Wi-Fi network adapter of the robot. You can now configure, monitor, and control the robot wirelessly via either the Kortex Web App or with *API* control.

Note: A Wi-Fi connection is **not recommended** for 1 kHz (low-level) control of the robot due to potential latency issues - a wired connection must be used for this purpose.

© 2025 Kinova inc. All rights reserved.

Assigning a static *IP* address for Wi-Fi to the robot

This section describes how to assign a static IP address to the robot for Wi-Fi connection. This makes it possible to always connect to the robot over Wi-Fi using the same IP address.

Before you begin

You will already need to have connected over Wi-Fi to the robot.

About this task

A previous section of the document describes how to connect to the robot via Wi-Fi. By default, when connecting, the robot will be assigned an IP address *dynamically* by the router. However, this means that in general the robot will receive different wireless IP addresses on different sessions. Sometimes, it will be advantageous to fix an IP address on that Wi-Fi network. You will need to obtain the MAC address for the robot *base* and use this to configure an assigned static IP in your Wi-Fi router. Depending on your organization, local IT may need to perform this step for you.

Procedure

1. Connect to the robot via the Kortex Web App, logging in to the application.
2. Navigate to the **System Information** page in the **Systems** page group.
3. Select the **Arm** tab, and then open the Base section on this tab.
4. Take note of the MAC address information. You will need this to configure a static IP address.
5. Login as an administrator to your Wi-Fi router via the web interface.
6. The details will differ from router to router. Find the MAC address entry for the robot base in the LAN settings. Change the lease type to static and either choose or manually enter an available IP address from the valid range. Apply the changes.

Results

The router is now set to assign the same configured IP address every time the robot connects to Wi-Fi.

What to do next

On any wireless device (laptop, tablet, smartphone) connected to the same Wi-Fi network, you will be able to connect to the robot using Kortex Web App by entering the assigned IP in a browser. Similarly you will be able to use the static IP address in applications developed using the *API*.

© 2025 Kinova inc. All rights reserved.

Disabling Wi-Fi

By default, Wi-Fi is enabled. Disable the Wi-Fi transceiver with Kortex Web App.

About this task

The robot may be connected to an available Wi-Fi network.

Procedure

1. Click **Configurations** > **Wireless & Networks**.
2. Tap **Wi-Fi**.

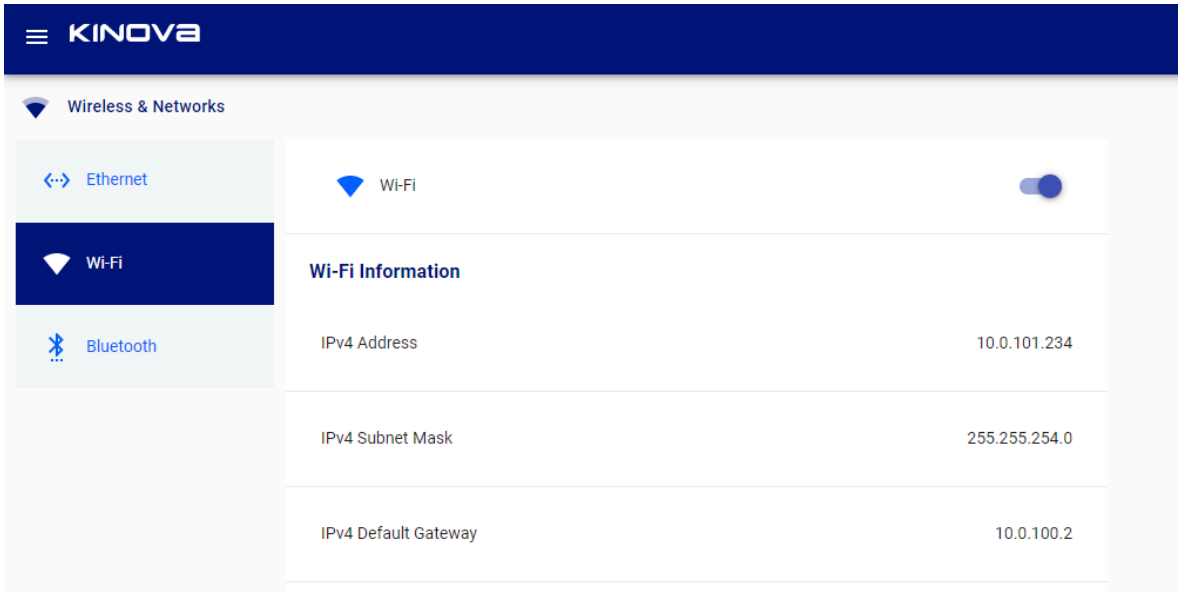

© 2025 Kinova inc. All rights reserved.

3. Click the **Wi-Fi** button to disable Wi-Fi.

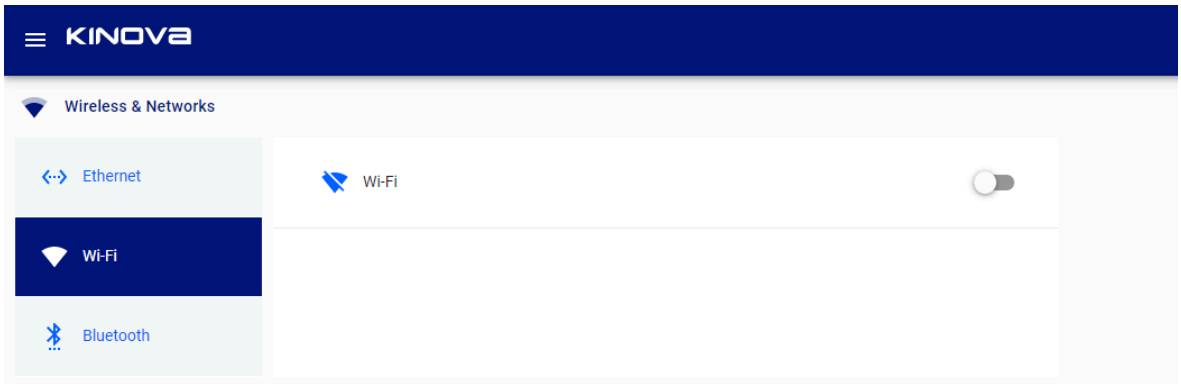

A pop-up dialog launches that states the robot needs to be rebooted.

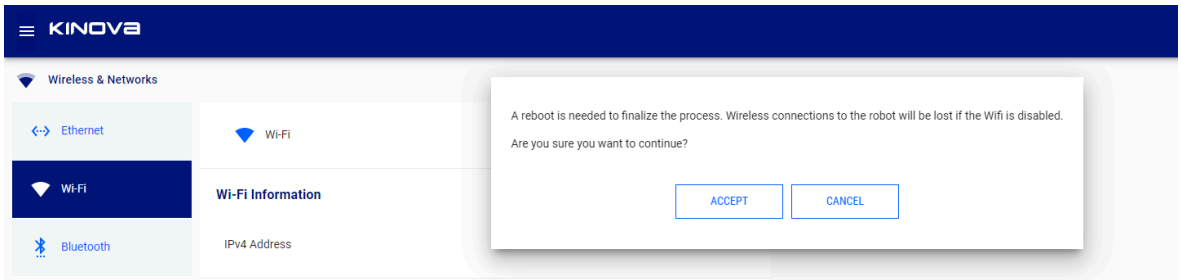

4. Click **ACCEPT** to reboot the robot with Wi-Fi disabled or **CANCEL** to continue with the current type of connection.
5. Click **Configurations** > **Robot** > **Arm** > **Base**.
6. Scroll down to Reboot Robot and click **REBOOT** to reboot the robot.

Results

The robot cannot transmit commands from Kortex Web App using Wi-Fi.

© 2025 Kinova inc. All rights reserved.

Enabling Wi-Fi

When Wi-Fi is disabled, you can enable the Wi-Fi transceiver with Kortex Web App.

About this task

The robot is not connected to any available Wi-Fi networks. Wi-Fi is currently not being used for communication with the robot.

Procedure

1. Click **Configurations** > **Wireless & Networks**.
2. Click **Wi-Fi**.

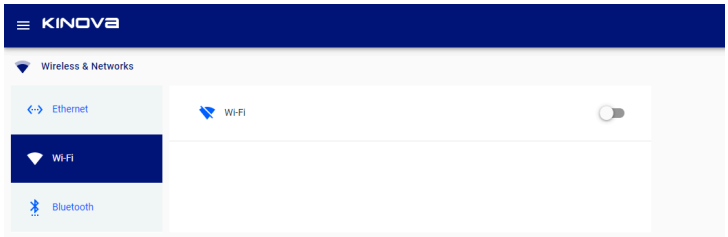

3. Click the **Wi-Fi** button to enable Wi-Fi.

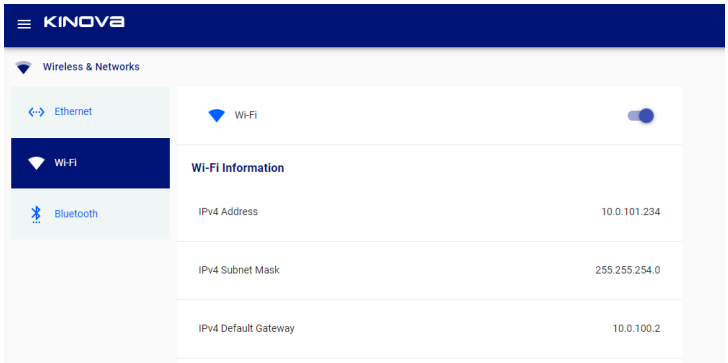

A pop-up dialog launches that states the robot needs to be rebooted.

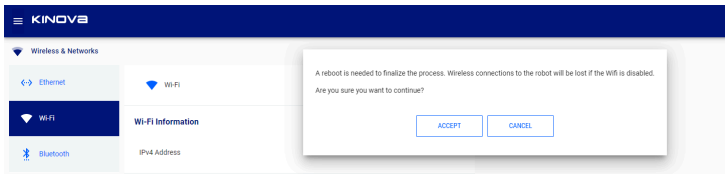

4. Click **ACCEPT** to reboot the robot with Wi-Fi enabled or **CANCEL** to continue with the current type of connection.
5. Click **Configurations** > **Robot** > **Arm** > **Base**.
6. Scroll down to Reboot Robot and click **REBOOT** to reboot the robot.

© 2025 Kinova inc. All rights reserved.

Results

You can now connect to available Wi-Fi networks.

© 2025 Kinova inc. All rights reserved.

Disabling Bluetooth

By default, Bluetooth is enabled, but it cannot be used. Disable the Bluetooth transceiver with Kortex Web App.

About this task

The Bluetooth antenna is in the *base* of Gen3 Ultra lightweight robot.

Procedure

1. Click **Configurations** > **Wireless & Networks**.
2. Click **Bluetooth**.

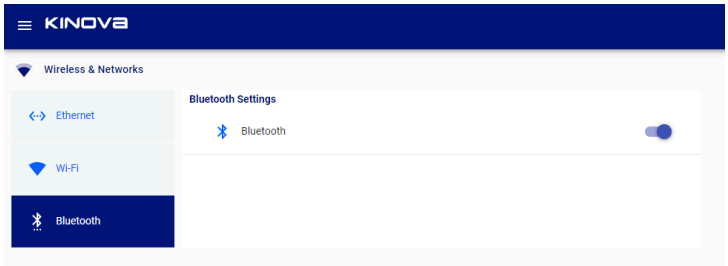

3. Click the **Bluetooth** button to disable Bluetooth.

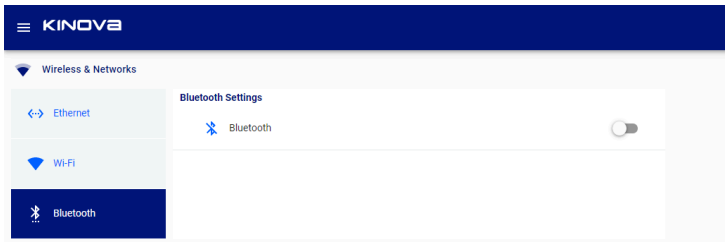

A pop-up dialog launches that states the robot needs to be rebooted.

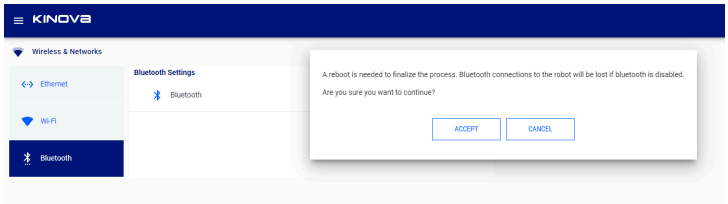

4. Click **ACCEPT** to reboot the robot with Bluetooth disabled or **CANCEL** to continue with the current type of connection.
5. Click **Configurations** > **Robot** > **Arm** > **Base**.
6. Scroll down to Reboot Robot and click **REBOOT** to reboot the robot.

© 2025 Kinova inc. All rights reserved.

Enabling Bluetooth

Even when you enable Bluetooth with Kortex Web App , it cannot be used.

About this task

The Bluetooth antenna is in the *base* of Gen3 Ultra lightweight robot.

Procedure

1. Click **Configurations** > **Wireless & Networks**.
2. Click **Bluetooth**.

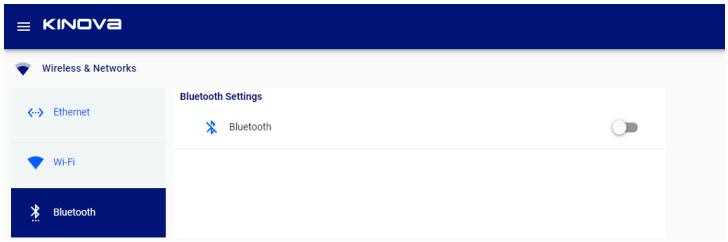

3. Click the **Bluetooth** button to enable Bluetooth.

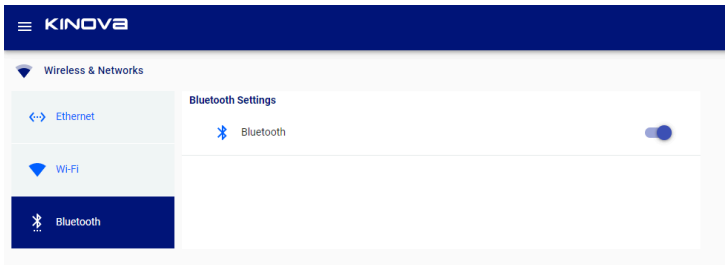

A pop-up dialog launches that states the robot needs to be rebooted.

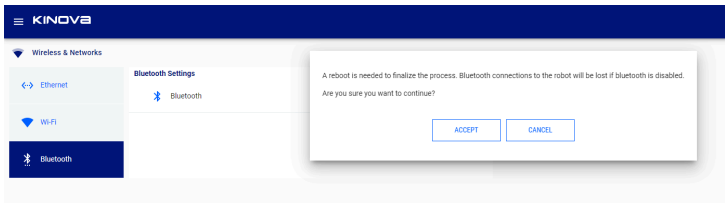

4. Click **ACCEPT** to reboot the robot with Bluetooth enabled or **CANCEL** to continue with the current type of connection.
5. Click **Configurations** > **Robot** > **Arm** > **Base**.
6. Scroll down to Reboot Robot and click **REBOOT** to reboot the robot.

© 2025 Kinova inc. All rights reserved.

Packaging Gen3 Ultra lightweight robot in general

To repackage the Gen3 Ultra lightweight robot, you must move the robot into the correct packaging pose for the number of DoFs of the robot.

About this task

Repackaging involves *backdriv*ing the robot, which should be done sparingly because the actuators may get damaged.

Procedure

1. Move the robot as close as possible to the packaging *position*. The *joint* position limits may hinder the exact position.

Option	Description
6 DoF position	[0°, 104°, 209° (±1°), 0°, 121° (±1°), 270°]
7 DoF position	[0°, 104°, 180°, 209° (±1°), 0°, 121° (±1°), 270°]

   Methods to move the robot into position:

   - Use Hand-Guiding mode.
   - Jog the robot using an Xbox controller.
   - Jog the robot using the Kortex Web App.
   - Send a `ReachJointAngles` action using the Kortex Web App.

     Tip: You may need to create or import the action.

   - Send a `ReachJointAngles` action using the Kortex *API* .
2. Switch off the robot and unplug it.
3. Apply force to backdrive any of the actuators that did not reach the desired packaging position until the joints of the arm reach the desired position.
4. Insert the robot in the Nanuk case.

© 2025 Kinova inc. All rights reserved.

Packaging Gen3 using the ReachJointAngles command

To repackage the Gen3 Ultra lightweight robot, you must move the robot into the correct packaging pose for the number of DoFs of the robot.

About this task

Repackaging involves *backdriving* the robot, which should be done sparingly because the actuators may get damaged.

Procedure

1. Mount the robot on a support, making sure that there is space for the end effect to go below the level of the *base* of the robot.

   Tip: When there is space for the *end effector* to go below the base of the robot, the robot is said to have negative Cartesian coordinates.

2. Switch on the robot.
3. Connect the robot to an external computer with an Ethernet cable.
4. Connect to Kortex Web App.
5. Navigate to **Operations** > **Actions**.
6. Click the **+** icon to create an Angular action.
7. Define the angular position.

Option	Description
6 DoF position	[0°, 270°, 180°, 212°, 118°, 270°]
7 DoF position	[0°, 270°, 180°, 212°, 0°, 118°, 270°]

8. Run the action.
9. Switch off the robot and unmount the robot.
10. Apply force to backdrive the actuator of the elbow by 1°.
11. Backdrive the actuator of the elbow again.
12. Switch on the robot.
13. Verify the angles in Kortex Web App.

© 2025 Kinova inc. All rights reserved.

14. Move actuator 2 to 104° without touching any of the other actuators.

Note: The elbow on the 6 DoF is joint 3.

The final angular position of the 6 DoF is [0°, 104°, 209° (±1°), 0°, 121° (±1°), 270°].

Note: The elbow on the 7 DoF is joint 4.

The final angular position of the 7 DoF is [0°, 104°, 180°, 209° (±1°), 0°, 121° (±1°), 270°].

15. Switch off the robot.

16. Place the robot in the foam container.

17. Insert the foam container into the Nanuk case.

Related topics

Accessing the Kinova® Kortex™ Kortex Web App on page 60

© 2025 Kinova inc. All rights reserved.

Dimensions, specifications, and capabilities

Schematic and dimensions - 7 DoF spherical wrist

Schematic diagram of the 7 DoF robot and the key physical dimensions of the robot.

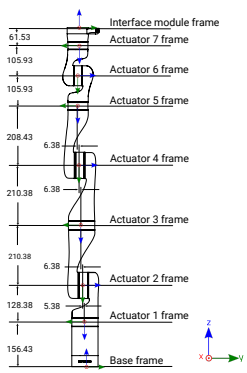

Figure 28: 7 DoF spherical wrist frames definition and dimensions

The image above defines reference frames for the *base*, joints (when all *joint angles* = 0) and *end effector*. Each frame is defined in terms of the previous frame via a transformation matrix. The diagram also indicates the link lengths and lateral offset values (measurements in mm).

The maximum reach of the robot, as defined by the distance from the shoulder (actuator 2 frame) to the interface module frame, is 90.2 cm.

Table 19: 7 DoF spherical wrist robot geometric parameters

Description	Length (mm)
Base to actuator 1	156.4
Base to shoulder (actuator 2)	284.8
First half upper arm length (actuator 2 to actuator 3)	210.4
Second half upper arm length (actuator 3 to actuator 4)	210.4
Forearm length - elbow to wrist (actuator 4 to actuator 5)	208.4
First wrist length (actuator 5 to actuator 6)	105.9
Second wrist length (actuator 6 to actuator 7)	105.9

© 2025 Kinova inc. All rights reserved.

Description	Length (mm)
Last actuator to interface module	61.5
Joint 1-2 offset	5.4
Joint 2-3 offset	6.4
Joint 3-4 offset	6.4
Joint 4-5 offset	6.4

Schematic and dimensions - 6 DoF spherical wrist

Schematic diagram of the 6 DoF robot and the key physical dimensions of the robot.

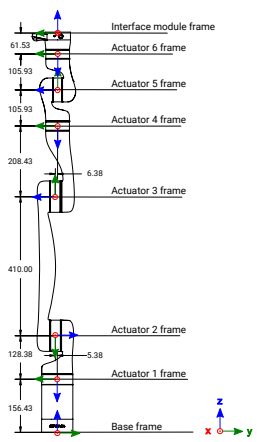

Figure 29: 6 DoF spherical wrist frames definition and dimensions

The image above defines reference frames for the *base*, joints (when all *joint angles* = 0) and *end effector*. Each frame is defined in terms of the previous frame via a transformation matrix. The diagram also indicates the link lengths and lateral offset values (measurements in mm).

The maximum reach of the robot, as defined by the distance from the shoulder (Actuator 2 frame) to the end effector frame, is 89.1 cm.

Table 20: 6 DoF spherical wrist robot geometric parameters

Description	Length (mm)
Base to actuator 1	156.4
Base to shoulder	284.8
Upper arm length	410.0
Forearm length (elbow to wrist)	208.4

© 2025 Kinova inc. All rights reserved.

Description	Length (mm)
First wrist length	105.9
Second wrist length	105.9
Last actuator to interface module	61.5
Joint 1-2 offset	5.4
Joint 3-4 offset	6.4

Technical specifications

Technical specifications for the Gen3 Ultra lightweight robot, categorized for ease of reference. Some of these also appear within the main body of the text.

Table 21: Safety/Security

Feature	Detail
Safety alarm (power monitor)	≥ 10A (maximum current)
Position monitor	default and user-defined *protection zones*
Thermal monitor	warning/shutdown above maximum operating temperature

Table 22: Environmental

Parameter	Value(s)
Temperature	-30 °C to 35 °C (operating)
	-30 °C to 50 °C (storage)
Relative humidity (non-condensing)	15% to 90% (operating)
Pressure	70 kPa to 106 kPa *
Sound pressure level (nominal)	< 55.5 dBA
Universal Power Supply (external)	300 W
Power supply input voltage	100 - 240 VAC
Power supply input frequency	50 - 60 Hz
Power supply ingress protection	IP42

© 2025 Kinova inc. All rights reserved.

Table 23: Controller (base)

Feature	Detail
power indicator	blue *LED*
status indicator	red/amber/green LED
USB 2.0 (two ports)	Xbox gamepad connect; 1 A charging (top), 500 mA USB peripherals (lower)
Gigabit Ethernet (RJ-45)	for development *PC* connection
Wi-Fi (*Institute of Electrical and Electronics Engineers (IEEE)* 802.11a/b/g/n)	Kinova® Kortex™ Kortex Web App and *API*
HDMI 1.4a	Internal use only
circular connector [Binder-USA 09 0463 90 19]	Internal use only
circular connector [Lumberg 0317 08]	power
sensors	voltage, current, temperature, accelerometer and gyroscope

Table 24: Robot

Parameter	Value(s)	
Mass (without brakes, without gripper, and with vision module)	7 DoF	8.2 kg
	6 DoF	7.2 kg
Payload	7 DoF	mid-range continuous; no gripper: 4.0 kg
		full-range continuous; no gripper: 2.0 kg
	6 DoF	mid-range continuous; no gripper: 4.0 kg
		full-range continuous; no gripper: 2.0 kg
Maximum reach (fully extended)	7 DoF	902 mm
	6 DoF	891 mm
Maximum Cartesian translation speed	50 cm/s	
Degrees of freedom	7 DoF, 6 DoF	
Actuators	small: qty 3 (small)	
	large: qty 4 (7 DoF), 3 (6 DoF)	

© 2025 Kinova inc. All rights reserved.

Parameter	Value(s)
Wrist interaction buttons	qty 2 (user-configurable; default for *admittance* control; *teaching mode* controls)
Power supply voltage	24 VDC (nominal, 20 to 30 V)
Materials	Carbon fiber shell
	Aluminum
Communications and control	100 Mbps Ethernet for real-time 1 kHz control
	100 Mbps Ethernet for Vision module/expansion

Table 25: Actuators

Feature	Value(s)
Sensors	current sensors (motor), temperatures (motor), voltage, torque, position

Table 26: Interface module

Feature	Function
Vision module	color and depth sensing
Wrist status LEDs	admittance mode indication
Wrist pushbuttons	admittance modes; teaching mode
Kinova internal end-effector interface connector	Internal use only
10-pin spring-loaded connector	RS-485 (compatible with Robotiq Adaptive Grippers)
20-pin user expansion connector [AVX/Kyocera 046288020000846+]	100 Mbps Ethernet
	universal asynchronous receiver transmitter (UART) (3.3V)
	Inter-Integrated Circuit (bus) (I2C) (3.3V)
	General Purpose Input/Output (GPIO) (3.3V, qty 4)
	24V @ 0.5A
	3.3V @ 0.1A for signaling
Sensors	accelerometer and gyroscope, voltage, temperature

© 2025 Kinova inc. All rights reserved.

Table 27: Vision

Feature	Detail
Depth sensor	480 x 270 (16:9) @ 30, 15, 6 *FPS* 424 x 240 (16:9) @ 30, 15, 6 FPS FOV: 72 ± 3° (diagonal) minimum depth distance - 18 cm
Color sensor	1920 x 1080 (16:9) @ 30, 15 FPS; *FOV* 47 ± 3° (diagonal) 1280 x 720 (16:9) @ 30, 15 FPS ; FOV 60 ± 3° (diagonal) 640 x 480 (4:3) @ 30, 15 FPS; FOV 65 ± 3° (diagonal) 320 x 240 (4:3) @ 30, 15 FPS; FOV 65 ± 3° (diagonal) focusing range - 30 cm to ∞

* subject to change

Sensors

The robot contains a number of different sensors. There are sensors in the base, actuators, and interface module. Sensors data can be accessed using the cyclic communications with the base.

The robot contains a number of sensors to provide feedback on the status of the robot. This data is used by the robot for internal monitoring and control.

The robot components contain the following sensors:

Base sensors

- Voltage
- Current
- Temperature
- 6-axis accelerometer/gyroscope

Actuator sensors

- Motor phases current sensors (one per phase)
- Motor phases temperature sensors (one per phase)
- CPU temperature sensor
- Input voltage sensor

© 2025 Kinova inc. All rights reserved.

- Hall effect sensors for BLDC motor drive
- Absolute rotary position encoder
- Incremental rotary position encoder
- Applied torque

Interface module sensors

- Temperature sensor (CPU, accelerometer and dedicated)
- 6-axis accelerometer/gyroscope

Access to sensors data

Data from some sensors can be read by users using the APIs or through the **Monitoring** page of the Kortex Web App.

The *API* method `RefreshFeedback()` in the `BaseCyclic` API returns a data structure with readings from sensors in:

- Base
- Actuators
- Interface

For detailed information on how to unpack this data in an application, see the `BaseCyclic` *API* documentation on the Kinova® Kortex™ GitHub repository.

The following tables give more information about the sensor data.

Effective workspace

Description of the effective workspace of the robot. The effective workspace is the region in space reachable by the tool.

Effective workspace overview

The effective workspace refers to the region in three-dimensional space which is reachable by the robot *tool*. This is impacted by several factors, including the number and length of the links, the *joint* ranges, and the shape of the links.

There are two definitions of effective workspace, the first being larger than the second.

1. **Nominal (or reachable) workspace** - the set of all locations in the three-dimensional space reachable by the tool through at least one combination of *end effector position* and *orientation*

© 2025 Kinova inc. All rights reserved.

2. **Dextrous workspace** - the subset of the nominal workspace in which the tool still has the full freedom to move, both in translation (three degrees of freedom) and in rotation (three degrees of freedom)

Detailed information

The following graphic illustrates a two-dimensional cross-section of the nominal workspace for the robot.

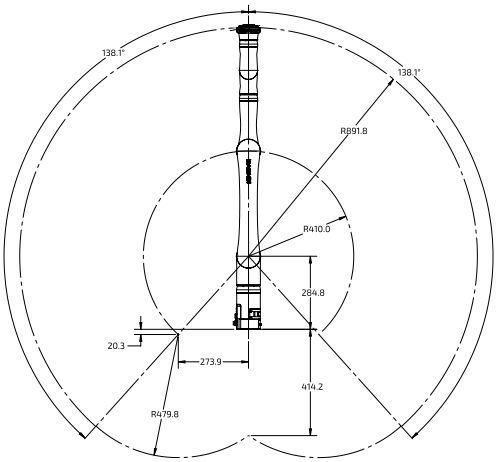

Figure 30: 6 DoF robot nominal workspace (measurements in mm)

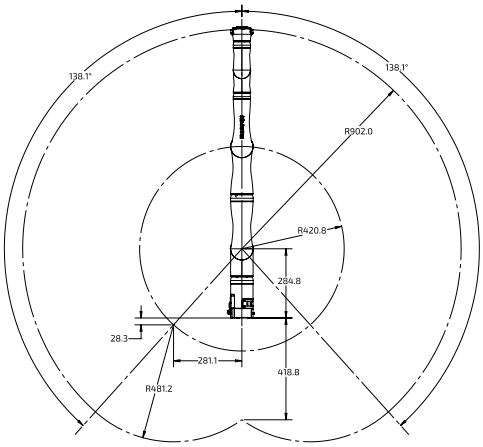

Figure 31: 7 DoF robot nominal workspace (measurements in mm)

© 2025 Kinova inc. All rights reserved.

Payload vs. workspace

Describes the variation of payload over the workspace and depending on the type of use.

Overview

The *payload* of the robot is the maximum mass that the robot can hold up at the end effector. The actuators must apply high torques. The payload is limited by the heat produced by the actuators. The payload is limited by distance and duration because of the high torque heat that is produced.

This is generally not one constant figure, but will depend on a few factors.

- radial distance from the base - the payload will be highest closest to the *base*, and will go down as the *end effector* gets farther out from the base *axis*.
- temporary vs. continuous - the robot will have a maximum payload that can be handled temporarily for a short period of time. However, continued use of the arm with that payload for an indefinite period will cause the arm to heat up, as the heat generated by the strain on the actuator exceeds the rate at which heat can be dissipated. However, a smaller mass can be handled for an indefinite period. This is referred to as the continuous payload limit.

The payload will also depend on whether a gripper is attached or not, with some of the payload capability reduced to lift the weight of the gripper.

© 2025 Kinova inc. All rights reserved.

Wrist interface, tool expansion, and vision

Interface module expansion - tips for installing tools

Describes steps needed to install and integrate a new tool onto the interface module.

At some point, you may want to install a new *tool* such as a gripper or sensor onto the robot.

Generally, this involves two steps.

1. Physically mounting the tool using the screw holes available on the Interface module face.

   Note: The holes on the Interface module face are laid out to allow easy installation of Robotiq Adaptive Grippers using the four supplied M5 Socket Head Cap Screws (SHCS include O-rings for compliance with the *IP* rating for sealing). For other third-party tools, it may be necessary to create a mounting structure matching the provided interface module bolting pattern, as discussed in the End effector reference design section.

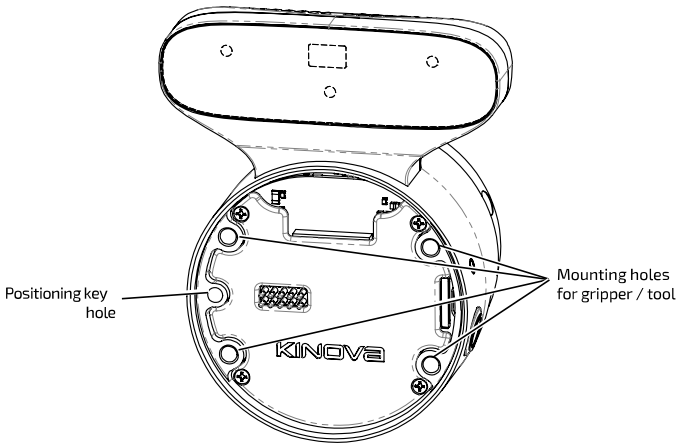

2. Integrating the tool to robot power and control. Integration of Robotiq Adaptive Grippers to the robot power and control signals uses the 10-pin spring-loaded connector. Other third-party tools can be powered through the pogo pins. Power, Ethernet, *UART*, *I^2C*, and GPIOs are available via the user expansion connector. The pinout details are described in later sections.

Note: If designing or installing your own tool or *end effector*, remember to take into consideration the field of view of the depth sensors when designing the length of the tool to avoid hindering the effectiveness of the vision module depth sensors.

© 2025 Kinova inc. All rights reserved.

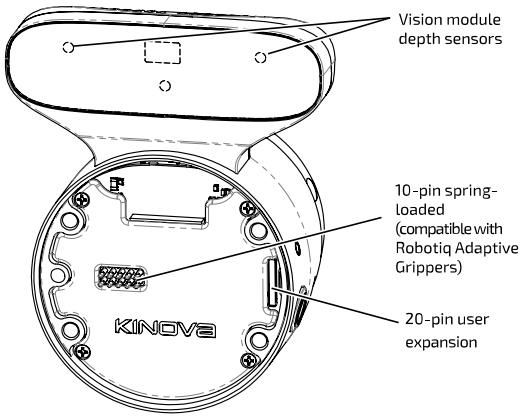

End effector reference design

An end effector reference design package is on the Kinova website. The package provides developers guidance on developing and integrating a new tool with the robot. The reference design includes a mechanical and electrical interface. Steps are required to configure the tool and its payload. Control of the tool is carried out using the interface module expansion interface.

Introduction

The Gen3 Ultra lightweight robot is designed for maximum extensibility. As such, the robot has a user expansion interface designed to simplify the development required to incorporate different sensors, *end effectors* or other *tools*/boards. The supported user interfaces are listed in the section Interface module user expansion connector pinout.

Kinova provides a reference design package which includes mechanical and electrical modular interfaces.

Mechanical interface

The mechanical interface is a flanged circular structure which converts the interface module bolting pattern to the *ISO* 9409-1-A50 mounting plate pattern common to many industrial robots.

Kinova recommends that the mechanical interface part of your end effector be machined from solid aluminum, though for applications where no *payload* will be attached (only sensors or PCBs), a 3D-printed interface part may suffice.

Note: If a 3D printed interface is used, perform an evaluation of the forces involved to ensure that adequate safety factors are observed.

Note: The structure includes openings at the top and bottom of the structure for the passage of cabling for the electrical interface. As a result, the mounting structure does NOT in itself provide ingress or *electromagnetic interference (EMI)* protection.

© 2025 Kinova inc. All rights reserved.

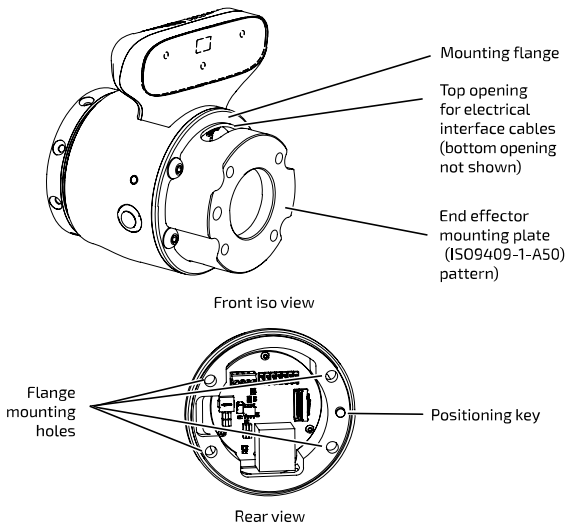

Figure 32: Reference design mechanical interface (details in reference design package)

The flange includes four mounting holes corresponding to the four mounting holes on the interface module. The rear face of the structure also includes a positioning key corresponding to the positioning key hole on the interface module to ensure that the structure is aligned with the right *orientation*.

Electrical interface

The electrical reference design acts as a breakout, giving access to:

- 24 V / 0.5 A
- 5 V / 2 A / 10 W, from 24 V (through a DC-DC buck converter)
- Expansion Ethernet (100 Mbit, through a RJ-45 port)
- *GPIO*, *I^2C* and *UART*

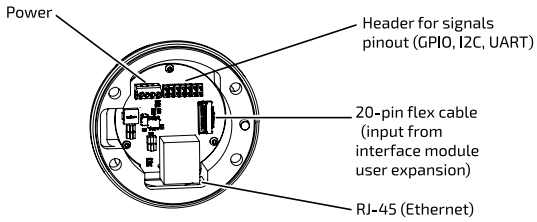

Figure 33: Reference design electrical interface (details in reference design package)

Mounting structure installation overview

The following general steps are required to install the reference design mounting structure on the robot:

© 2025 Kinova inc. All rights reserved.

- If you have not already done so, remove the end cap from the interface module, preserving the four screws and the O-ring. The screws and O-ring are used for the installation of the mounting structure.
- Align the rear face of the mounting structure with the interface module.

  Note: Ensure that the positioning key aligns with the positioning key hole on the interface module.
- Use a 20 pin flat flex cable to connect the user expansion port on the interface module to the input connector on the mounting structure electrical interface.
- Place the O-ring around the mounting structure.
- Bring the mounting structure together with the interface and attach using the four screws.

With the mounting structure in place, an end effector tool can be mounted and integrated electrically.

Reference design package

The reference design package is available for download on the Kinova website: https://artifactory.kinovaapps.com/artifactory/generic-documentation-public/Documentation/Gen3/CADS%20%26%20Drawings/End_Effector_Reference_Design.zip. Other resources are available online: https://www.kinovarobotics.com/product/gen3-robots#Product__resources

The package includes several useful files to help you with building an end effector. You may use these files as is or as a starting point to design your own end effector. The package contents include:

- STL file of the mechanical interface, for 3D-printing
- STEP file and PDF drawing of the mechanical interface, for machining
- STEP file of the Kinova breakout PCB for integration into CAD programs
- KR13933.ASY file which directs the assembly of the PCB (including the BOM)
- KR13933.PCB which directs the PCB fabrication (including Gerber files)
- KR13933.SCH which includes the circuit board schematic diagrams

Tool configuration

To fully integrate an end effector tool with the robot control and cyclic feedback, you will need to configure the tool information using either the Kortex Web App **Robot Configurations** page or the *API* via the `SetToolConfiguration()` function in `Kinova.Api.ControlConfig`.

You will need to configure:

- transform for the reference *frame* of the tool in relation to robot interface module frame
- mass of mechanical interface + end effector tool

© 2025 Kinova inc. All rights reserved.

- coordinates of *center of mass* of mechanical interface + end effector tool in terms of the interface module reference frame

Configuring the transform ensures that the robot is aware of the geometry of the tool in relation to the rest of the robot to calculate and accurately report the tool position.

Configuring the mass and center of mass coordinates of the tool ensures that the control libraries of the robot can properly take into account the presence of the tool mass in the control of the robot.

Payload configuration

If you want to carry a known *payload* mass with the tool, you will need to configure the payload information using either the Kortex Web App **Robot Configurations** page or the *API* via the `SetPayloadConfiguration()` function in `Kinova.Api.ControlConfig`.

For this you will need to configure:

- mass of the payload
- coordinates of the center of mass of the payload in terms of the tool frame.

Similar to the configuration of tool mass and center of mass coordinates, configuring the payload ensures that the control libraries of the robot can properly take into account the presence of the tool mass in the control of the robot.

Controlling the end effector via interface expansion

With your end effector tool physically mounted on the mechanical interface, integrated electrically via the electrical interface, and properly configured, you can communicate with and control the end effector tool via the expansion interface. For more details, see Using interface module expansion to control devices via API on page 97.

© 2025 Kinova inc. All rights reserved.

Removing end cap from the interface module

The interface module ships with an end cap to protect the interface. This needs to be removed to expose the interface for connecting a tool.

Before you begin

You will need a 3 mm hex key.

About this task

The robot ships originally with an end cap over the interface. Attaching an end effector to the robot requires removing the end cap first. Removing the end cap exposes expansion and end-effector connection points.

When removing the end cap, there is an O-ring exposed which **must be conserved**. The O-ring is used to provide protection against water ingress and *EMI* at the junction between the robot interface and the *end effector*.

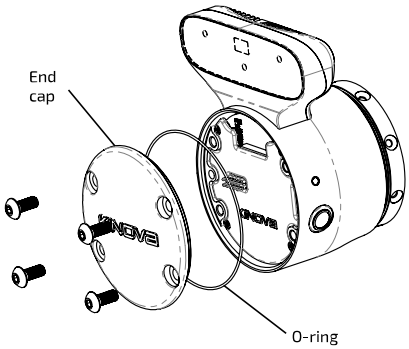

Procedure

1. The end cap is held onto the robot interface using four M5 button head cap screws. Using a 3 mm hex key, remove the screws and preserve them.
2. Remove the end cap, and set aside with the screws.
3. You will see an O-ring on removing the end cap.

Note: Set aside the O-ring with the screws and end cap for safe keeping. The screws and O-ring will be used when attaching an end effector *tool* (as described in the end effector reference design). The cap needs to be replaced whenever an end effector is not installed.

© 2025 Kinova inc. All rights reserved.

Robotiq Adaptive Grippers installation (optional)

The mechanical and electrical interface of the robot makes it easy to install a Robotiq Adaptive Gripper (2F-85 or 2F-140 gripper) on the robot. Some configuration is required.

Before you begin

You will need four M5 Socket Head Cap Screws and 4 mm hex key (supplied).

You will also need to have removed the interface end cap (robot comes with end cap connected). You will need the O-ring that was exposed when the end cap was removed.

You will need a computer connected to the robot to perform some configuration.

About this task

This procedure describes the installation for Robotiq Adaptive Grippers on the interface module of the robot. The interface module allows easy mounting of Robotiq Adaptive Grippers, and the Robotiq 2F-85 and 2F-140 Gripper models are fully supported on the robot and relatively simple to integrate. This procedure describes how to:

- mechanically mount the gripper on the robot
- integrate the gripper with the robot in terms of electrical power and control
- configure the robot as using the particular gripper model in the *Web App*

The interface module has four mounting holes corresponding to the bolt pattern on the gripper. The 10 spring-loaded pins on the interface mate with a contact plate on the inside of the Robotiq Gripper to establish electrical supply and controls.

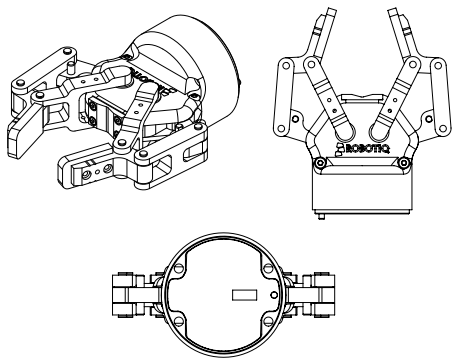

Figure 34: Robotiq Adaptive Gripper (Robotiq 2F-85 Gripper shown)

© 2025 Kinova inc. All rights reserved.

Procedure

1. Prepare the four supplied M5 Socket Head Cap Screws and a 4 mm hex key.

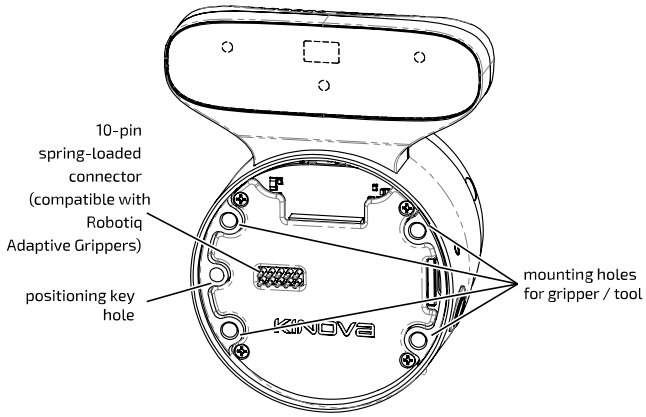

2. Place the O-ring around the diameter of the gripper. The O-ring protects the junction between the interface module and gripper from water ingress and EMI.
3. Locate the positioning key on the Robotiq Gripper and the corresponding hole on the interface module face.

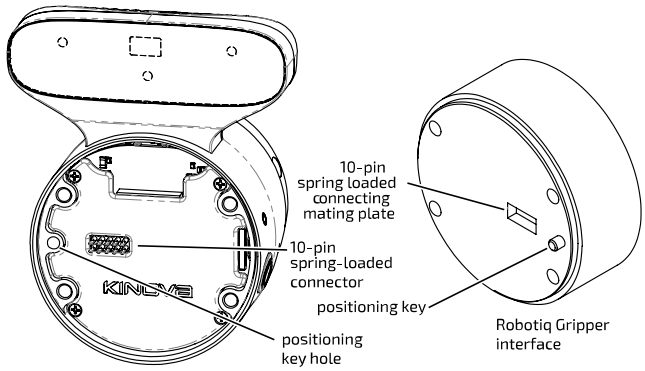

4. Position the gripper interface against the Interface module interface so that the positioning key of the gripper is in the positioning key hole of the interface module and the 10-pin spring-loaded connector of the interface module is aligned with the corresponding mating interface on the gripper.
5. Insert the four screws through the front face of the gripper. Tighten each screw in sequence until they are all snug (do not over tighten).
6. Next, some configuration is required to integrate the gripper at the software level. You need to tell the robot what gripper model is connected. With the robot connected to a computer, open the Kortex Web App and log in.

© 2025 Kinova inc. All rights reserved.

7. In the menu, access the `Robot` configuration page from the `Configurations` page group.

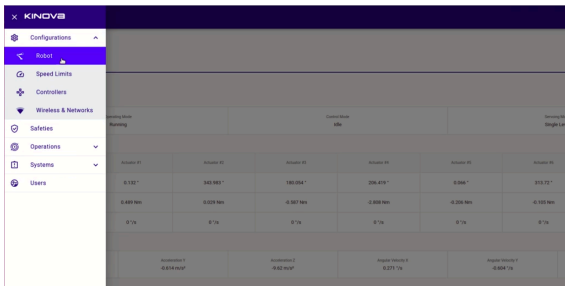

8. On the `Robot` configurations page, open the `Arm` configurations tab and the `Product` section. There is a field **End Effector Type**, with a drop-down menu selector. You will see two options: `Robotiq 2F-85 gripper, 2 fingers` and `Robotiq 2F-140 gripper, 2 fingers`. Choose your gripper type from the list.

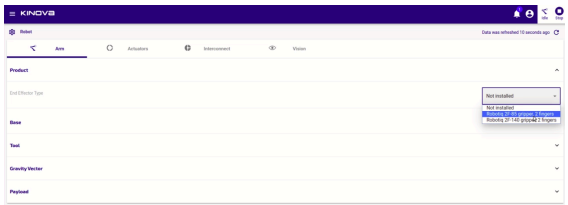

9. Once you select the gripper type, you will be prompted to reboot the robot to apply the changes to the configuration.

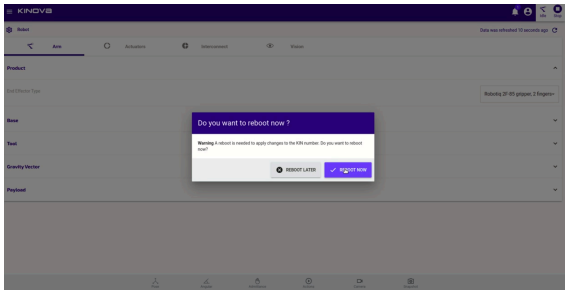

10. The robot will go through a reboot, and the Kortex Web App will refresh, waiting for the reboot to finish. When the process is done (about 30 seconds), the End Effector Type will appear on the `Robot` configurations page.

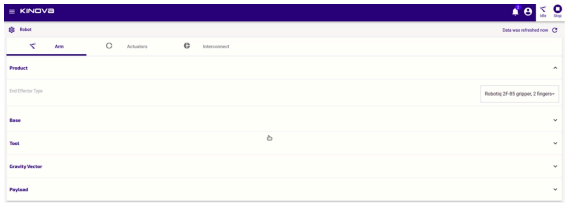

Note: You can change the transform of the *tool* to move the default *Tool Center Point (TCP)* set for the gripper.

© 2025 Kinova inc. All rights reserved.

Results

The Robotiq Gripper is now be mechanically installed on the robot. The gripper is also fully integrated with the robot for power and controls, and the gripper type is set in the software configuration of the robot. The robot provides power to the gripper, and the gripper can be controlled using either the provided gamepad or the Kortex Web App virtual joysticks. The robot control library will now take into account the mass and *center of mass* of the gripper in controlling the robot. As well, the robot will take into account the gripper reference frame (between the two fingers) when reporting back updates for the tool position.

What to do next

Warning: For your personal safety, it is strongly recommended that you read the user documentation for the Robotiq Gripper before use.

Robotiq 2F-85 and 2F-140 Gripper default configuration settings reference

Reference for tool configuration settings to use for the Robotiq 2F-85 and 2F-140 Grippers. This information is provided as a reference for advanced users and is not needed for general setup and use of the Robotiq gripper with the robot.

The following information represents the *tool configuration* settings used by the robot for the Robotiq 2F-85 and 2F-140 gripper. The gripper is fully supported on the robot, therefore there is no need to explicitly enter the details in the tool configuration section of the Kortex Web App **Robot Configuration** page or via the `Kinova.Api.ControlConfig` *API* as you would have to do when adding another tool.

Selecting the gripper model under **Arm** > **Product** > **End Effector Type** on the **Robot Configuration** page of the Kortex Web App and rebooting the robot suffices to apply these settings. The information below is provided as a reference for advanced users who need to account for the information in computing dynamics and kinematics of the robot + gripper.

Table 28: Robotiq 2F-85 Gripper tool configuration settings

Setting		Value
Transform (from interface module frame to gripper frame)	X	0
	Y	0
	Z	0.120 m
	θ_X	0
	θ_Y	0

© 2025 Kinova inc. All rights reserved.

Setting		Value
	θ_Z	0
Tool mass		0.925 kg
left of mass coordinates (in interface module frame)	X	0
	Y	0
	Z	0.058 m

Table 29: Robotiq 2F-140 Gripper tool configuration settings

Setting		Value
Transform (from interface module frame to gripper frame)	X	0
	Y	0
	Z	0.200 m
	θ_X	0
	θ_Y	0
	θ_Z	0
Tool mass		1.025 kg
left of mass coordinates (in interface module frame)	X	0
	Y	0
	Z	0.073 m

Interface module bolting pattern

Reference for the interface module bolting pattern (mechanical interface). This is useful for mounting a tool on the robot.

Drill pattern for mounting screws and position key

The drill pattern below is for the four mounting screws. Openings to accommodate the required cables connections with the connectors also need to be added. The use of a 4 mm dowel pin to accurately localize the positioning key hole is optional but strongly recommended.

© 2025 Kinova inc. All rights reserved.

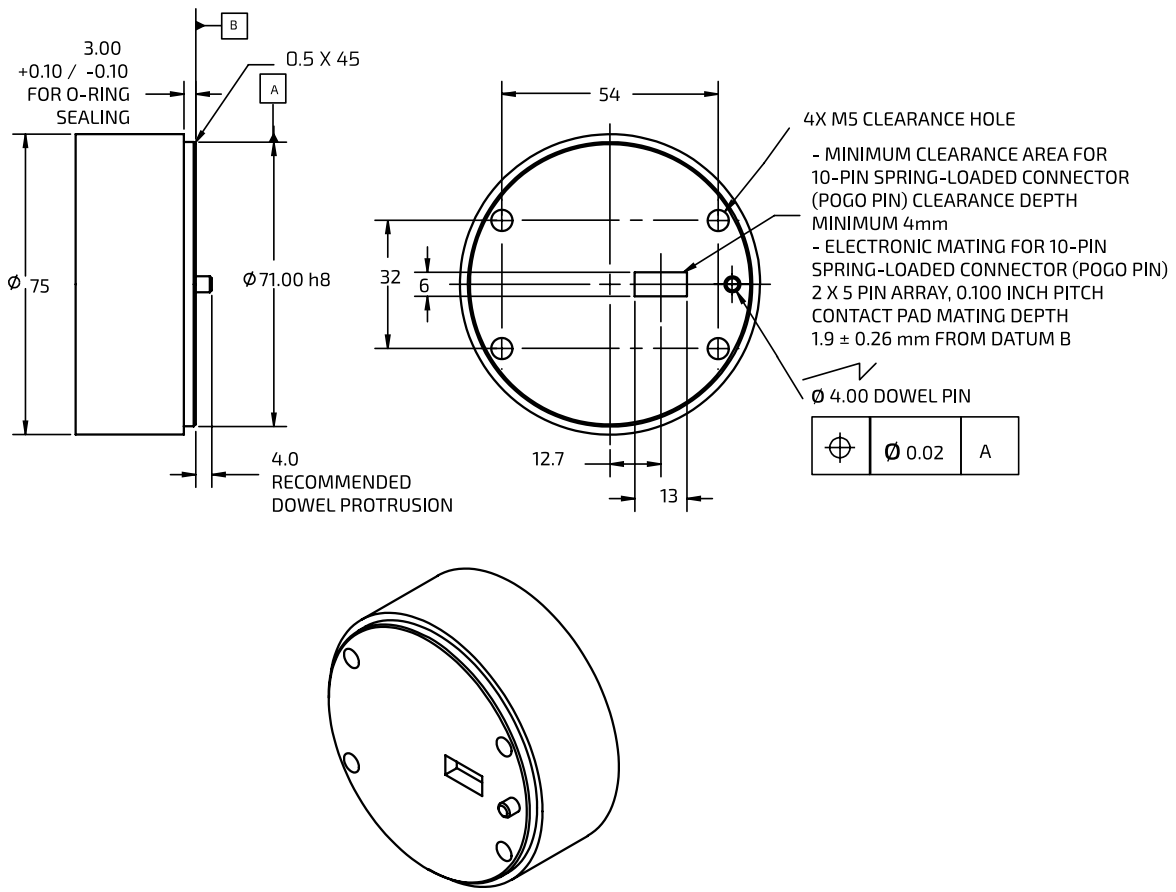

Figure 35: Mounting holes for gripper/*tool* (all dimensions in mm)

Interface module user expansion connector pinout

Pinout reference for the interface module user expansion connector.

The interface module user expansion connector pin assignment is described in the table below. These expansion pins provide power to devices connected at the interface module, as well as offering connectivity to enable control of devices via the APIs.

© 2025 Kinova inc. All rights reserved.

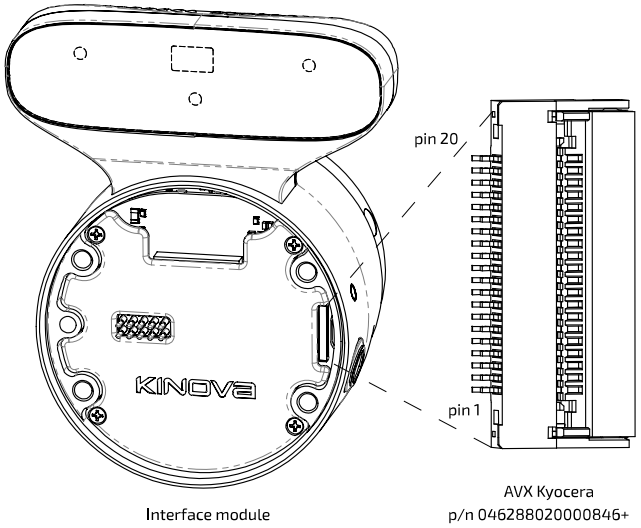

Figure 36: Interface module user expansion connector

Table 30: Interface module user expansion pinout

Pin	Name	Comment
1	+24V USER	24V / 0.5A power; a protection device limits current shared between gripper and user expansion port to 1A total.
2	+24V USER	
3	GND	power return path
4	GND	
5	ETH_RX_P	Ethernet Rx 100Mbps (connected with EXP bus)
6	ETH_RX_N	
7	GND	signal return path
8	ETH_TX_P	Ethernet Tx 100Mbps (connected with EXP bus)
9	ETH_TX_N	
10	GND	signal return path
11	+3V3	3.3V / 100 mA; can be used for small *integrated circuit (IC)* or sensor
12	UART_TXD	signal 3.3V
13	UART_RXD	signal 3.3V
14	GND	signal return path
15	I2C_SCL	I^2C clock - 3.3V
16	I2C_SDA	I^2C data - 3.3V

© 2025 Kinova inc. All rights reserved.

Pin	Name	Comment
17	GPIO1	General Purpose Input / Output 3.3V
18	GPIO2	
19	GPIO3	
20	GPIO4	

Using interface module expansion to control devices via API

References for additional information on how to make use of interface module expansion pins for bridging to connected devices via UART,I^2C, or GPIO.

Overview

The interface module expansion connector offers three interfaces for bridging to connected devices:

- *UART*
- *I^2C*
- *GPIO*

The reference design section gives guidance on connecting an *end effector* device mechanically and electrically.

Controlling the end effector device via UART, I^2C, or GPIO

Controlling the interfaced device via *UART*, *I^2C*, or *GPIO* is done via the Kinova® Kortex™ *API* using the `Kinova.Api.InterconnectConfig` service.

Examples of using *UART*, *I^2C*, and *GPIO* as a bridge to communicate with and control a device can be seen on the Kinova® Kortex™ GitHub repository.

- C++ examples
- Python examples

Spring-loaded connector pinout

Pinout reference for the spring-loaded connector.

The spring-loaded connector pin assignment is described in the table below.

© 2025 Kinova inc. All rights reserved.

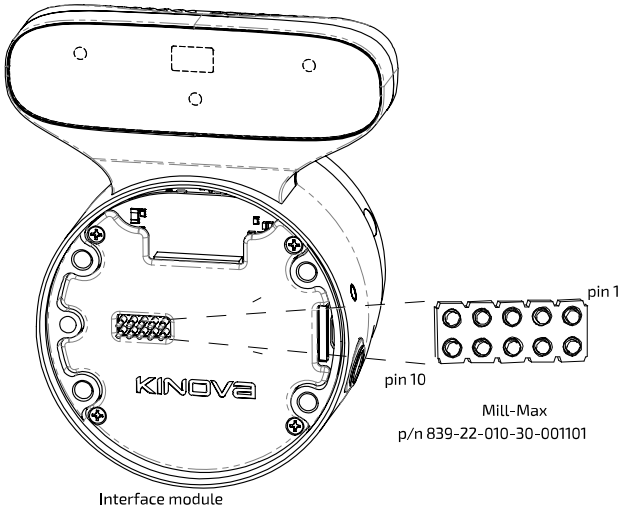

Figure 37: Spring-loaded connector

Table 31: Spring-loaded connector pinout

Pin	Name	Comment
1	GND	power return path
2	GND	
3	+24V	24V / 1A power for end device (current limit shared with interface module user expansion port)
4	+24V	
5	PRESENT	end device presence detection (connect to GND on end device)
6	N/C	no connection
7	RS485_N	RS-485 signal pair (bidirectional; Robotiq devices only)
8	RS485_P	
9	GND	signal return path
10	N/C	no connection

© 2025 Kinova inc. All rights reserved.

Configuring the Ethernet bridge

The Ethernet bridge connects the robotic arm to another device and sends data between the robot and the device. To work effectively, the bridge must be configured.

About this task

The basic steps in configuring the Ethernet bridge can be used in different use cases. However, the steps in the configuration may differ slightly, depending on the platform being used. Linux and Windows are the two supported platforms.

The example is based on configuring a connection to the Interconnect Ethernet Expansion IO.

Procedure

Configure the device.

1. Configure a static *IP* address in the 10.20.0.0/24 subnetwork on the interface connected to the Interconnect module.

```
sudo ifconfig your_interface your_chosen_address netmask
 255.255.255.0
```

Example when address is 10.20.0.50 and interface is eth0:

```
sudo ifconfig eth0 10.20.0.50 netmask 255.255.255.0
```

2. Configure the default gateway for the interface.

```
sudo route add default gw 10.20.0.1 your_interface
```

Example interface is eth0:

```
sudo route add default gw 10.20.0.1 eth0
```

Important: Do not use the address `10.20.0.100` as the default gateway; `10.20.0.100` is the Vision module address.

3. Unplug and replug the Ethernet cable.
The computer relaunches the network discovery. The communication between the computer and Gen3 Ultra lightweight robot restarts.

Configure Gen3 Ultra lightweight robot.

© 2025 Kinova inc. All rights reserved.

4. Use the Kinova Kortex API to enable and configure the Ethernet link of the arm.

   Reference: Refer to Gen3_ethernet_bridge on the Kortex GitHub repository https://github.com/Kinovarobotics/Kinova-kortex2_Gen3_G3L for more information and for examples.

5. Change `speed` and `duplex`.
6. Run the code from the build folder.

Platform	Command
Linux	`./01-ethernet_bridge_configuration`
Windows	`01-ethernet_bridge_configuration.exe`

Configure the computer.

7. Run the script from an **Administrator: Compand Prompt** or an **Administrator: Windows PowerShell** to create the route to the device on Gen3 Ultra lightweight robot.

   The script routes all data packets through the base of the arm. It checks the device regularly to determine whether the route is working.

   Reference: Refer to Gen3_ethernet_bridge on the Kortex GitHub repository https://github.com/Kinovarobotics/Kinova-kortex2_Gen3_G3L for the script.

   Tip: Use the Bash script on Linux. Use the Batch file on Windows.

Command on Linux

```
sudo ./configure_route_to_device.bash ARM_IP_ADDRESS INTERFACE
DEVICE_ADDRESS
```

Command on Windows

```
.\configure_route_to_device.bat ARM_IP_ADDRESS DEVICE_ADDRESS
```

Parameter name	Description
ARM_IP_ADDRESS	IP of the arm
INTERFACE	Host interface name connected to the arm
DEVICE_ADDRESS	Address of the device connected to the Interconnect module

© 2025 Kinova inc. All rights reserved.

Accessing Vision module color and depth streams

The vision module color and depth streams can be accessed from a computer connected to the robot base.

The video module sensors capture two video streams:

- color
- depth

The data from these streams is sent from the vision module back to the *base* controller via the vision / expansion channel carried over the internal flex cable links.

These two streams are accessible via the *Real Time Streaming Protocol (RTSP)* on a computer connected to the robot (with transport over real-time transport protocol (RTP)).

Using the default *IP* address settings for the base controller, the two streams are accessible via:

- color sensor stream: `rtsp://<base IPv4 address>/color`
- depth sensor stream: `rtsp://<base IPv4 address>/depth`

For the default configuration of the base controller network interface, this would give:

- `rtsp://192.168.1.10/color`
- `rtsp://192.168.1.10/depth`

Note: Examples in the documentation will use the default base controller IP setting for simplicity.

Streams specifications

- pixel format: Z16 pixel format - 16 bits LSB transferred as gray scale
- H.264 baseline profile (constant bitrate)
- RTSP server listening on port 554 (default)
- maximum of two simultaneous connections per stream
- inactivity timeout of 30 seconds

The Kinova® Kortex™ Developer Guide section of the user guide describes in more detail how to work with the vision module camera streams.

For more guidance on configuring the vision module using the Kinova® Kortex™ *API*, see the vision examples on the Kinova® Kortex™ GitHub repository:

- C++ vision examples
- Python vision examples

© 2025 Kinova inc. All rights reserved.

Robot control

High-level and low-level robot control

The robot can be controlled in either high-level or low-level robot control. There are benefits to both forms of control. High-level control is easier with more protections, while low-level control offers faster commands and finer-grained control with less protection.

High-level is the default on boot-up and offers the safest and most straight-forward control.

In both high-level and low-level, commands are sent through the robot *base*.

In high-level control, commands are sent to the base via a single command using the `Kinova.Api.Base` *API*. These commands are processed by Kinova robot control libraries.

The robot control library applies high-level control features like:

- *Singularity avoidancem*
- *Protection zones*
- Cartesian and joint limits

The control library also breaks down the command into smaller commands that the base will send incrementally to the individual robot actuators via its 1 kHz communication loop with the actuators.

In low-level control, the user sends a series of small commands to each actuator and the gripper as part of a user-defined loop, at a rate up to 1 kHz, using the `Kinova.Api.BaseCyclic` *API*. The base receives these commands and routes them to the appropriate actuators and the gripper via its own 1 KHz communication loop with robot devices.

High-level control is simpler to use and offers added protections. However, it is slower due to the overhead of processing by the Kinova control library. High-level control runs at 40 Hz.

Low-level control offers faster commands and finer-grained control of the robot. The user's commands can be applied directly to the actuators without being changed by the high-level control features, which is useful, for example, when implementing a controller external to the robot. The user should be aware that the protection offered by the high-level control libraries will not be applied as a result.

For detailed information on the implementation of high- and low-level control, see Robot servoing modes on page 203 in the Kinova® Kortex™ Developer Guide section of this User Guide.

© 2025 Kinova inc. All rights reserved.

High-level and low-level robot control methods reference

Control robot movement by using key methods in the *API*. For the full *API* documentation and code examples, please see the Kortex GitHub repository or watch our videos on https://www.youtube.com/watch?v=zQewb08M4sA&list=PLz1XwEYRuku5rZjJWBr6SDi93jgWZ4FHL

High-level (`Kinova.Api.Base`)

Table 32: Send or play a trajectory (Cartesian or joint)

Method	Description
`PlayCartesianTrajectory (ConstrainedPose)`	Moves to the specified *pose* (with specified Cartesian constraint on trajectory) **Note:** This method will be deprecated in a future software version.
`PlayCartesianTrajectoryPosition (ConstrainedPosition)`	Moves to the specified *position* (with specified Cartesian constraint on trajectory) **Note:** This method will be deprecated in a future software version.
`PlayCartesianTrajectoryOrientation (ConstrainedOrientation)`	Moves to the specified *orientation* (with specified Cartesian constraint on trajectory) **Note:** This method will be deprecated in a future software version.
`PlayJointTrajectory (ConstrainedJointAngles)`	Moves to the specified *joint angles* (with specified joint constraint on trajectory) **Note:** This method will be deprecated in a future software version.
`PlaySelectedJointTrajectory (ConstrainedJointAngle)`	Moves specified joint to the specified joint angle (with specified joint constraint on trajectory). **Note:** This method will be deprecated in a future software version.
`PlayPreComputedJointTrajectory (PreComputedJointTrajectory)`	Play pre-computed angular trajectory

© 2025 Kinova inc. All rights reserved.

Table 33: Send Cartesian command to tool

Method	Description
`SendTwistCommand (TwistCommand)`	Sends a twist command to tool (velocity and angular velocity)
`SendTwistJoystickCommand (TwistCommand)`	Sends a twist joystick command to tool. The twist values sent to this call are expected to be a ratio of maximum value (between -1.0/+1.0)
(EXPERIMENTAL) `SendWrenchCommand (WrenchCommand)`	Force control. Sends a wrench command to tool (force and torque)
(EXPERIMENTAL) `SendWrenchJoystickCommand (WrenchCommand)`	Force control. Sends a wrench joystick command to tool. The wrench values sent to this call are expected to be a ratio of maximum value (between -1.0/+1.0)

Note: High-level *force control* is supported, but as an experimental feature only. Users should exercise caution.

Table 34: Send command to joints

Method	Description
`SendJointSpeedsCommand (JointSpeeds)`	Sends a joint speeds command, that is the desired speed of one or many joints
`SendSelectedJointSpeedCommand (JointSpeed)`	Sends a speed command for a specific joint
`SendJointSpeedsJoystickCommand (JointSpeeds)`	Sends the desired joystick speeds for one or multiple joints. Values sent to this call are expected to be a ratio of maximum value (between -1.0/+1.0)
`SendSelectedJointSpeedJoystickCommand (JointSpeed)`	Sends a joystick speed for a specific joint. Value sent to this call is expected to be a ratio of maximum value (between -1.0/+1.0)

Table 35: Initiate admittance control

Method	Description
`SetAdmittance (Admittance)`	Sets the robot in the chosen *admittance* mode (Cartesian, joint, null space)

© 2025 Kinova inc. All rights reserved.

Table 36: Send gripper commands

Method	Description
`SendGripperCommand (GripperCommand)`	Sends a command to move the gripper. Commands the fingers of the gripper in either position or velocity.

Low-level (Kinova.Api.BaseCyclic)

Table 37: Low-level cyclic commands

Method	Description
`Refresh (Command)`	Send a new incremental refresh command to the actuators and gripper for the current 1 ms interval. Command actuators position, angular velocity, torque (**ADVANCED USERS ONLY**), and motor current, as well as gripper finger motors. Receive feedback on current status of *base*, actuators, tool, and gripper.
`RefreshCommand (Command)`	Send a new incremental refresh command to the actuators and gripper for the current 1 ms interval. Command actuators position, angular velocity, torque (**ADVANCED USERS ONLY**), and motor current, as well as gripper finger motors. No feedback provided.
`RefreshFeedback ()`	Receive feedback on current status of base, actuators, tool, and gripper.

Note: Low-level actuator *torque control* is for advanced users only and should only be used by users who know what they are doing. It is very important to carefully monitor the torque commands sent to the actuators to ensure that excessive torque values are not sent. Incorrect use can lead to rapid movements that can be dangerous for people and equipment. Make sure that the area around the robot is clear before experimenting with torque control.

© 2025 Kinova inc. All rights reserved.

Control features

Overview of control features of the robot.

The robot has the following control features that improve the safety and usability of the robot, and protect it from damage:

- *Singularity avoidance*
- *Protection zones*
- Angular limits
- Cartesian limits

Singularity avoidance

The singularity avoidance feature of the robot control library handles or avoids singularities in Cartesian *control modes*. The robot behavior, including tool speed may be altered near a singularity.

A singularity refers to any robot configuration (set of *joint angles*) that causes the Jacobian matrix relating actuator rotation speed to *end effector* velocities to be ill-conditioned, thus rendering the solution mathematically unstable. The ill-condition comes from the determinant approaching zero or the matrix losing rank.

At a singularity, the mobility of the robot is reduced, meaning the arbitrary motion of the manipulator in a Cartesian direction is lost (losing a degree of freedom). This occurs when two or more robot axes become colinear, leading to unpredictable / extreme *joint* velocities when trying to attain a certain Cartesian *pose*. For example, when two axes become colinear in space, rotation of one can be canceled by counter-rotation of the other, leaving the actual joint location indeterminate. Near a singularity a small linear end effector motion requires disproportionately large angular velocities of the actuators.

Note: The robot controller firmware features capabilities to handle / avoid singularities in any 'Cartesian' mode. As a singularity cannot occur unless inverse kinematics are calculated, singularities do not occur in any of the 'joint' modes.

Note: The robot behavior may change somewhat at or near a singularity. For example, the *tool* speed may be reduced or the motion may deviate from the commanded motion.

Note: The robot has *singularity avoidance* algorithms. However, the robot cannot use any *Cartesian mode* to move and must use a Joint *angular mode* to exit the singular if the robot is driven and stopped in the singularity.

For more information on robot singularity configurations, see here.

© 2025 Kinova inc. All rights reserved.

Protection zones

Users can define geometric protection zones where the movement of checkpoints on the robot is either prevented. These can be defined using either the Kortex Web App or developer *API*.

Overview

With this feature, the user defines *protection zones* programmatically or by using the Kortex Web App, based on a few basic geometric shapes. Moreover, the user can specify a speed limitation in the **envelope** of defined thickness surrounding each protection zone.

One or more protection zones can be configured to define geometric volumes about the robot *base*, where the motion of the robot *end effector* is either limited or precluded.

By defining suitable protection zones, the robot can be set to prevent collisions with known fixed obstacles in the immediate environment of the robot while in operation.

Note: Protection zones are active only in **Cartesian** *control modes*. These protections are not available in **angular** control modes.

Note: If multiple protection zones are used, we recommend that the same envelope speed limitations be used for each.

Note: There is no hard limit on the number of protection zones that can be simultaneously active, but for best results it is recommended to activate no more than four protection zones at one time.

Note: Envelope-only protection zones, where all the dimensions of the protection zone are set to zero but the envelope thickness is set to a non-zero value are NOT supported.

Robot tool behavior

The *tool* of the robot will never enter protection zones. If the robot is commanded to stop in or pass through a protection zone and if it is configured, any motion of the tool will toward the inside of the protection zone will stop at the outer boundary of the protection zone. The tool will be able to "slide" on the outer surface of the zone but not enter inwards.

The tool can move within the surrounding envelope, but at a reduced speed.

Checkpoints and behavior of checkpoints

Additional checkpoints are used for protection zones and are defined for the robot at the center of the reference *frames* of *joints* 3, 4, 5, and 6.

Warning: The reference frame is centered on actuators. The checkpoint is on the reference frame. Configure protection zones with additional space to take into account the physical dimensions of the actuators.

© 2025 Kinova inc. All rights reserved.

Note: The vision module is NOT currently included in the defined checkpoints. It is possible that the vision module can enter into a protection zone. Use caution when moving the end of the robot near a protection zone.

For these checkpoints, the motion will stop at the outer surface of the protection zone. Checkpoints will move within the envelope surrounding a protection zone, but at a reduced speed.

Protection zone shapes

Protection zones can be defined using one of three basic shape types:

- Rectangular prism - *position* of center, length, width, and height dimensions, and angular *orientation* of the rectangular prism are configurable
- Cylindrical - position of center, radius, height, and angular orientation of the cylinder are configurable.
- Spherical - position of center and radius of sphere are configurable

A planar or disc-shaped protection zone can be defined by setting the thickness of the zone to zero in either a rectangular prism or cylindrical protection zone.

Editing protection zones

Protection zones can be defined, edited, and deleted using either the Kortex Web App or the developer *API*.

Joint limits

The robot has joint limits used in robot high-level control. This impacts the position, speed, acceleration, and torque applied by the joints.

Overview

When controlling the robot in high-level, the robot control library applies a number of different *joint* limits for safety purposes. This includes limits on:

- joint position
- joint speed
- joint acceleration
- joint torques

The limits applied in a particular situation depend on the current high-level control mode.

© 2025 Kinova inc. All rights reserved.

Gen3 7 DoF spherical wrist robot joint limits

Table 38: Joint position limits

Actuator	Angular range	
	Lower limit	Upper limit
1	- ∞	+ ∞
2	- 128.9°	+ 128.9°
3	- ∞	+ ∞
4	- 147.8°	+ 147.8°
5	- ∞	+ ∞
6	- 120.3°	+ 120.3°
7	- ∞	+ ∞

Table 39: Joint speed limits (general limits)

Actuator	Limit (magnitude)
large (joints 1 - 4)	79.64 °/s (1.39 rad/s)
small (joints 5 - 7)	69.91 °/s (1.22 rad/s)

Table 40: Joint speed limits (admittance and force control modes)

Actuator	Limit (magnitude)
all joints	50.0 °/s (0.8727 rad/s)

Table 41: Joint acceleration hard limits

Actuator	Limit (magnitude)
large (joints 1 - 4)	297.94 °/s^2 (5.2 rad/s^2)
small (joints 5 - 7)	572.95 °/s^2 (10.0 rad/s^2)

Table 42: Joint acceleration limits (angular joystick and joint trajectory)

Actuator	Limit (magnitude)
large (joints 1 - 4)	57.3 °/s^2 (1.0 rad/s^2)
small (joints 5 - 7)	572.95 °/s^2 (10.0 rad/s^2)

© 2025 Kinova inc. All rights reserved.

Table 43: Joint torques soft limits

Actuators	Limit (magnitude)
large (joints 1 - 4)	39.0 N * m
small (joints 5 - 7)	9.0 N * m

Gen3 6 DoF spherical wrist robot joint limits

Table 44: Joint position limits

Actuator	Angular range	
	Lower limit	Upper limit
1	- ∞	+ ∞
2	- 128.9°	+ 128.9°
3	- 147.8°	+ 147.8°
4	- ∞	+ ∞
5	- 120.3°	+ 120.3°
6	- ∞	+ ∞

Table 45: Joint speed limits (general limits)

Actuator	Limit (magnitude)
large (joints 1 - 3)	79.64 °/s (1.39 rad/s)
small (joints 4 - 6)	69.91 °/s (1.22 rad/s)

Table 46: joint speed limits (admittance and force control modes)

Actuator	Limit (magnitude)
all joints	50.0 °/s (0.8727 rad/s)

Table 47: Joint acceleration hard limits

Actuator	Limit (magnitude)
large (joints 1 - 3)	297.94 °/s^2 (5.2 rad/s^2)
small (joints 4 - 6)	572.95 °/s^2 (10.0 rad/s^2)

© 2025 Kinova inc. All rights reserved.

Table 48: Joint acceleration limits angular joystick and joint trajectory)

Actuator	Limit (magnitude)
large (joints 1 - 3)	57.3 °/s^2 (1.0 rad/s^2)
small (joints 4 - 6)	572.95 °/s^2 (10.0 rad/s^2)

Table 49: Joint torques soft limits

Actuator	Limit (magnitude)
large (joints 1 - 3)	39.0 N * m
small (joints 4 - 6)	9.0 N * m

Control modes and relevant joint limits

Control mode	Joint limits applied
Cartesian trajectory	joint position, joint speed
angular trajectory	joint position, joint speed, joint acceleration, joint torque (for pre-computed trajectories)
Cartesian joystick	joint position, joint speed
angular joystick	joint position, joint speed, joint acceleration
Cartesian admittance	joint angle, joint speed
joint admittance	joint angle, joint speed
null space admittance (**7 DoF robot only**)	joint angle, joint speed

Behavior at joint limits

When joint limits are reached, the behavior of the robot will be altered depending on the type of limitation.

Limit	Behavior when limit is reached
joint acceleration	joint acceleration will max out at acceleration limit
joint speed	acceleration go to zero and joint speed will max out at speed limit
joint position	joint acceleration and joint speed goes to zero and motion of the joint will stop at the position limit

© 2025 Kinova inc. All rights reserved.

Cartesian limits

The robot has limits on tool motion applying in high-level Cartesian control. These limits apply on top of underlying joint limits.

Overview

Cartesian limits on the motion of the *tool* in *Cartesian modes* (these limits do not apply in *angular modes*) are applied as follows:

- In Cartesian joystick, the magnitude (*vector* norm) of the linear and rotational speeds of the tool are capped. *Twist* commands whose linear and / or rotation speed exceed these limits will be re-scaled proportionally so that the **magnitudes** of tool linear and angular speeds will not exceed the limits, but the commanded **directions** of tool movement will be respected.
- For all Cartesian modes, the individual joint speeds will be capped at their limits. The speed of all *joints* will be proportionally scaled so that:
  - no individual joint exceeds the speed limit
  - the desired direction of motion is respected
- For all Cartesian modes, joint positions will be capped at their limits.

Spherical wrist robot Cartesian limitations

Limit		Value
twist limits	linear	0.5 m/s
	angular	50 °/s (0.8727 rad/s)
wrench limit	force	40.0 N
	torque	15.0 N·m

High-level control modes description

Overview of the high-level control modes of the robot.

The robot is controllable via a number of high-level *control modes*:

- *Trajectory modes*
  - Singular *trajectory*
  - Cartesian trajectory
- Joystick control modes
  - Cartesian joystick

© 2025 Kinova inc. All rights reserved.

  - Angular joystick
- *Admittance* modes
  - *Cartesian admittance*
  - Joint admittance
  - Null space admittance (7 DoF model only)
- Force control modes
  - Force control
  - Force control motion restricted

Trajectory control modes

Trajectories define a path of the robot through space, either Cartesian or joint, over a time period. There are different ways available to define trajectories.

Using trajectory *control modes*, the user can command the robot to a desired endpoint.

There are a few different ways a *trajectory* can be defined.

Reach endpoint

Users can provide an **endpoint** to reach, and the let the control software of the robot compute how to follow a *path* to reach the endpoint. The robot controller computes an interpolated trajectory (between current *pose* and target pose) to reach the final *position* while satisfying configured limits, and commands the robot to follow this trajectory. These trajectories, once defined, can be played back. This is a good setting when you want the robot to go to a desired end state but you are not overly concerned about the exact path it follows getting there and exactly how long it takes.

Pre-computed trajectory

Users can supply a **pre-computed trajectory** to the robot. A pre-computed trajectory is generally auto-generated by some sort of path planning software or algorithm rather than built manually. A pre-computed trajectory is defined as a time series of settings for *joints* angular positions, velocities, and accelerations at each timestamp. The robot control software will verify that the trajectory is valid and reasonable, satisfying configured limits. Users can indicate a desired continuity mode for the trajectory against which the trajectory can be checked (position, or position and velocity, or position, velocity and acceleration).

The robot control library will perform the following validations on the pre-computed trajectory:

- trajectory is non-empty
- for each trajectory point, position, velocity, and acceleration values must be provided for each joint in the robot

© 2025 Kinova inc. All rights reserved.

- trajectory contains no `NaN` values
- timestamp of the first trajectory point must be 0.000 seconds and the difference in time stamps between successive points must be 0.001 seconds
- joint positions, speeds, accelerations, and torques must be within robot joint limits
- continuity - the trajectory is continuous in terms of (user can specify which of these continuity checks to apply):
  - position - joint position variation between successive timesteps is less than the maximum variation (based on joint speed limit)
  - speed - speed values are consistent (within tolerances) with derivative of position
  - acceleration - acceleration values are consistent (within tolerances) with derivative of speed
- trajectory execution (when starting the trajectory) - the joint positions and speeds for the first point in the trajectory must match the initial robot joint positions and speeds

Note: For safety reasons, trajectories failing any of the validation checks will be rejected, and you will receive an error *notification*. To get more detailed information about why a particular trajectory failed, use the method `GetTrajectoryErrorReport()` in `Kinova.Api.Base`.

Trajectory modes

In **Cartesian Trajectory** mode, the positions are defined in terms of the desired *Cartesian space* pose of the *tool frame*. This mode enables *singularity avoidance*. Cartesian trajectory mode can be activated by sending a pose endpoint. Cartesian Trajectory mode is not compatible with pre-computed trajectories.

In **Angular Trajectory** mode the positions are defined in terms of the desired joint angles for the actuators. Angular Trajectory mode can be activated by sending an endpoint joint state or a pre-computed trajectory.

Users have the option to apply constraints to trajectories. There are three options available for constraints:

- Duration - the time period (in seconds) in which the trajectory is to be carried out
- Speed - the maximum speed (meters/second for Cartesian, degrees/second for angular) of the motion while carrying out the trajectory
- No constraint - the robot will go to the endpoint without the time or speed being specified

Note: If a requested trajectory constraint will cause angular limits to be exceeded in the course of the trajectory, (for example, the duration is too short and requires a speed or acceleration that is not feasible) the trajectory will be rejected.

© 2025 Kinova inc. All rights reserved.

In angular trajectories, all three options are available (duration, speed, no constraint).

In Cartesian trajectories, the speed constraint or no constraint options are available.

Trajectory control modes are set by sending a trajectory using the appropriate *API* methods, or the Kortex Web App **Actions** page.

Joystick control modes

Joystick control modes allow the robot to be controlled by sending motion (speed) commands by either Cartesian or joint.

Joystick Control modes provide the user the ability to create a desired motion of the robot by sending commands to the robot. This is done using joystick control inputs (physical gamepad or virtual joystick) or directly using *API* commands.

In **Cartesian Joystick** mode the motion of the robot *end effector*, both linear and angular, is controlled. Cartesian Joystick is entered by:

- sending *API twist* commands (specify linear and angular velocity of the end effector)
- activating Xbox gamepad Twist linear and Twist *angular modes*
- sending Kortex Web App Pose virtual joystick control inputs in velocity control

This mode provides for *singularity avoidance* and obstacle avoidance (protection zones).

For Cartesian control, the reference *frames* for translation and *orientation* control are configurable:

Table 50: Cartesian reference frames options

Cartesian frame mode	Reference frame for translation	Reference frame for orientation
mixed mode	base	tool
tool mode	tool	tool
base mode	base	base

Note: Orientations are defined using an **x-y-z extrinsic convention**. That is, rotation about the fixed x-axis, followed by rotation about the fixed y-axis, followed by rotation about the fixed z-axis.

In **Angular Joystick** mode the *joints* of the robot are moved in angular space using joint angular velocity commands or joystick control inputs provided to the actuators. The joints can be moved individually or together.

Angular joystick mode can be entered by:

© 2025 Kinova inc. All rights reserved.

- sending *API* joint speed commands
- activating Xbox gamepad Joint *mapping*
- sending commands via Kortex Web App Angular virtual joystick

Admittance modes

There are multiple admittance modes on the robot allowing admittance control.

There are multiple *admittance* modes on the robot allowing for different types of admittance control.

In **Cartesian admittance** mode, the user manipulates the robot, and exerted effort is interpreted as an effort exerted on the *tool*. A spherical workspace centered on actuator two is defined. If the user tries to extend the robot beyond this workspace, the robot will resist and come back inside the workspace.

In **joint admittance** mode the *joints* of the robot rotate according to the external torques applied.

In **null space admittance** mode, the tool stays in the same *pose* while the user manipulates the joints of the robot (within the *null space*). The robot moves within the null space according to the torques applied.

Note: *Null space admittance* is not available for the 6 *DoF* robot model.

Note: For all three admittance modes, the robot control library will automatically adapt to the user-configured *gravity vector*, tool, and *payload* information. The user is responsible for correctly defining the gravity vector, as well as tool and payload information using either the Web App or *API* (`Kinova.Api.ControlConfig`). Incorrect configuration of these parameters can cause unexpected behavior in admittance modes.

There are four ways to put the robot into admittance:

- use the method `SetAdmittance` in the *API*.
- Kortex Web App control panel admittance mode selection
- admittance selection buttons on Xbox gamepad modes (*Twist* linear and angular modes for Cartesian and Null space admittance, Joint mode for Joint admittance)
- admittance mode physical buttons on the interface module.

Note: Motion in admittance modes is constrained by internal safety limits for the robot on velocity and torques. This includes Cartesian linear velocity limits and joint limits for angular velocity and torque.

© 2025 Kinova inc. All rights reserved.

Force Control modes

The robot can be controlled in Force control mode. A wrench command defining force and torque is applied to the robot tool. A constraint can be applied restricting the resulting motion in the direction of the desired wrench.

In **Force Control** mode, a *wrench* command (force and torque) is sent to the *tool*. This allows you to use the tool to apply a desired force and torque on an external object.

In *force control* mode the tool will also accept external forces as in Cartesian *admittance* mode.

The tool will move according to the resultant of the commanded and external forces.

When a wrench command is sent to the robot, the corresponding accelerations (linear and angular) will be applied to the tool until:

- a new command is received, or
- Cartesian or *joint* limits are reached

Force Control Motion Restricted is a sub-mode of Force Control mode in which the resulting motion of the *end effector* is constrained to the direction of the desired wrench.

Force Control can be entered by sending a Wrench command via *API* commands.

Low-level control detailed description

Low-level control is achieved by using the `UDPTransportClient` command over port 10001.

The command establishes a communication channel between *API* cyclic clients and the robot at a rate of 1 kHz. The cyclic clients provide methods to obtain feedback from the sensors and to send commands directly to devices; using the cyclic client methods bypasses the regular overhead from the controller.

Important: Use `UDPTransportClient` over port 10001 when the API client intends to communicate with the robot at 1 kHz.

Low-level control implementation

The level of risk between receiving low-level feedback and sending low-level commands differs. It is important to understand how to implement low-level control of the robot.

A full list of methods for low-level functionality is in the topic High-level and low-level robot control methods reference on page 103.

CAUTION: Low-level control, and *torque control* in particular, is intended for advanced users only.

© 2025 Kinova inc. All rights reserved.

Any cyclic client under any condition can use the method `RefreshFeedback()` to access feeback. However, the arm must be in one of two modes for commands to be sent using the low-level *API*.

- Low-level *servoing* mode
- Low-level bypass servoing mode

Note: Use the method `SetServoingMode(ServoingModeInformation)` of the `Base` client to switch the servoing mode of the robot.

Low-level servoing mode uses the `BaseCyclic` client to send low-level commands to the robot as a system. This is the recommended way to use the low-level API.

Use low-level bypass to route messages directly to the devices by creating a cyclic client for each device.

Remember: A device is an actuator, interconnect, or gripper.

Users are responsible for creating a high-frequency command loop at a rate of 1 kHz and for decomposing desired robot movements into small command increments for actuators and gripper motors. These command increments are sent sequentially to the robot *base* at a 1 kHz frequency using this real-time session. The robot base then routes these individual command increments to the actuators and gripper using its own 1 kHz cyclic communications with the robot devices. Each individual command increment must be executed within the 1 ms time interval.

Carry out low-level control of the robot through the `Kinova.Api.BaseCyclic` API.

When the robot is in any of the low-level servoing modes, actuators can be sent specific commands.

- Joint position
- Joint speed
- Joint torque
- Joint motor current

When the robot is in any of the low-level servoing modes, grippers can be sent specific commands.

- Gripper finger position
- Gripper finger velocity

Use the method `SetControlMode(ControlModeInformation)` from the `ActuatorConfig` client to select the type of command you wish to send to the actuator. After the type of actuator

© 2025 Kinova inc. All rights reserved.

command is selected, fill in the appropriate command structures and send them to the robot using the method `Refresh(Command)`. Send these commands at a rate of 1 kHz.

Note: When command types other than *Joint* positions are sent to actuators, always include the *position* returned by the latest actuator feedback in the command; actuator positions are used to monitor following errors.

Note: When command types other than Joint positions are sent to actuators, always include the position returned by the latest actuator feedback in the command; actuator positions are used to monitor following errors.

For more details on how to implement low-level control, including API documentation and code examples, please see the Kortex GitHub repository: https://github.com/Kinovarobotics/Kinova-kortex2_Gen3_G3L.

Low-level feedback

Each device on the robot has a cyclic client *API* service associated with it that defines the components of the feedback available for each device.

Example of devices on the robot:

- Base
- Actuators
- Interconnect
- Gripper

Table 51: Content of the Feedback structure defined by the BaseCyclic client

frame_id	Identification number. Corresponds to the frame_id of the command sent.
base	BaseFeedback object containing the feedback of the robot as a system
actuators	Array of ActuatorFeedback objects containing the feedback of each actuator
interconnect	Interconnect Feedback object containing the feedback from the interconnect module.

Table 52: Content of the BaseFeedback structure defined by the BaseCyclic client

active_state_connection_identifier	Connection identifier of the last processed command which triggered an arm state change

© 2025 Kinova inc. All rights reserved.

active_state	Active state of the arm
arm_voltage	Voltage applied on the arm (V)
arm_current	Current applied on the arm (A)
temperature _cpu	CPU temperature (°C)
temperature_ambient	Ambient temperature (°C)
imu_acceleration_x	IMU measured acceleration along the X-axis (m/s^2)
imu_acceleration_y	IMU measured acceleration along the Y-axis (m/s^2)
imu_acceleration_z	IMU measured acceleration along the Z-axis (m/s^2)
imu_angular_velocity_x	IMU measured angular velocity along the X-axis (°/s)
imu_angular_velocity_y	IMU measured angular velocity along the Y-axis (°/s)
imu_angular_velocity_z	IMU measured angular velocity along the Z-axis (°/s)
tool_pose_x	Measured Cartesian position of the *TCP* along the X-axis (m)
tool_pose_y	Measured Cartesian position of the TCP along the Y-axis (m)
tool_pose_z	Measured Cartesian position of the TCP along the Z-axis (m)
tool_pose_theta_x	Measured Cartesian *orientation* of the TCP along the X-axis (°)
tool_pose_theta_y	Measured Cartesian orientation of the TCP along the Y-axis (°)
tool_pose_theta_z	Measured Cartesian orientation of the TCP along the Z-axis (°)
tool_twist_linear_x	Measure Cartesian linear velocity of the TCP along the X-axis (m/s)
tool_twist_linear_y	Measure Cartesian linear velocity of the TCP along the Y-axis (m/s)
tool_twist_linear_x	Measure Cartesian linear velocity of the TCP along the Z-axis (m/s)
tool_twist_angular_x	Measure Cartesian angular velocity of the TCP along the X-axis (°/s)
tool_twist_angular_y	Measure Cartesian angular velocity of the TCP along the Y-axis (°/s)
tool_twist_angular_z	Measure Cartesian angular velocity of the TCP along the Z-axis (°/s)
tool_external_wrench_force_x	Computed force applied on the TCP along the X-axis

© 2025 Kinova inc. All rights reserved.

tool_external_wrench_force_y	Computed force applied on the TCP along the Y-axis
tool_external_wrench_force_z	Computed force applied on the TCP along the Z-axis
tool_external_wrench_torque_x	Computed torque applied on the TCP along the X-axis
tool_external_wrench_torque_y	Computed torque applied on the TCP along the Y-axis
tool_external_wrench_torque_z	Computed torque applied on the TCP along the Z-axis
fault_bank_a	The arm fault flags bank A (0 if no fault)
fault_bank_b	The arm fault flags bank B (0 if no fault)
warning_bank_a	The arm warning flags bank A (0 if no warning)
warning_bank_b	The arm warning flags bank B (0 if no warning)
commanded_tool_pose_x	Commanded Cartesian position of the TCP along the X-axis (m)
commanded_tool_pose_y	Commanded Cartesian position of the TCP along the Y-axis (m)
commanded_tool_pose_z	Commanded Cartesian position of the TCP along the Z-axis (m)
commanded_tool_pose_theta_x	Commanded Cartesian orientation of the TCP along the X-axis (°)
commanded_tool_pose_theta_y	Commanded Cartesian orientation of the TCP along the Y-axis (°)
commanded_tool_pose_theta_z	Commanded Cartesian orientation of the TCP along the Z-axis (°)

Table 53: Content of the ActuatorFeedback structure defined by the BaseCyclic client

command_id	Command ID
status_flags	(internal use only)
jitter_comm	Jitter from the communication (us)
position	Position of the actuator (°)
velocity	Velocity of the actuator (°/s)
torque	Torque applied on the actuator (Nm)
current_motor	Current applied on the motor (A)

© 2025 Kinova inc. All rights reserved.

voltage	Voltage applied on the main board (V)
temperature_motor	Maximum temperature of the three motor phases (°C)
temperature_core	Microcontroller temperature (°C)
fault_bank_a	The actuator fault flags bank A
fault_bank_b	The actuator fault flags bank B
warning_bank_a	The actuator warning flags bank A
warning_bank_b	The actuator warning flags bank B

Table 54: Content of the Feedback structure defined by the InterconnectCyclic client

feedback_id	ID of the frame the feedback is associated to
status_flags	(internal use only)
jitter_comm	Jitter from the communication (us)
imu_acceleration_x	IMU measured acceleration along the X-axis (m/s^2)
imu_acceleration_y	IMU measured acceleration along the Y-axis (m/s^2)
imu_acceleration_z	IMU measured acceleration along the Z-axis (m/s^2)
imu_angular_velocity_x	IMU measured angular velocity along the X-axis (°/s)
imu_angular_velocity_y	IMU measured angular velocity along the Y-axis (°/s)
imu_angular_velocity_z	IMU measured angular velocity along the Z-axis (°/s)
voltage	Voltage of the main interconnect board (V)
temperature_core	Microcontroller temperature (°C)
fault_bank_a	Interconnect fault bank A
fault_bank_b	Interconnect fault bank B
warning_bank_a	Interconnect warning bank A
warning_bank_b	Interconnect warning bank B
tool_feedback	Feedback as defined by the GripperCyclic client

Table 55: Content of the Feedback structure defined by the GripperCyclic client

feedback_id	ID of the feedback frame
status_flags	Status flags

© 2025 Kinova inc. All rights reserved.

fault_bank_a	Interconnect fault bank A
fault_bank_b	Interconnect fault bank B
warning_bank_a	Interconnect warning bank A
warning_bank_b	Interconnect warning bank B
motor	Array of MotorFeedback objects as defined by the GripperCyclic client

Table 56: Content of the MotorFeedback structure defined by the GripperCyclic client

motor_id	ID of the gripper motor
position	Position of the gripper fingers (%)
velocity	Velocity of the fingers (% of max)
current_motor	Current consumed by the gripper motor (mA)
voltage	Motor voltage (V)
temperature_motor	Motor temperature (°C)

Low-level commands

In addition to feedback, the cyclic client for each type of device also defines the components of the commands that can be sent to each device in real-time.

Table 57: Content of the Command structure defined by the BaseCyclic client

frame_id	Identifier that will be associated to the feedback obtained in the same frame the command is processed
actuators	An array of ActuatorCommand objects, which should contain commands for every actuator
interconnect	An InterconnectCyclic Command object.

Table 58: Content of the ActuatorCommand structure defined by the BaseCyclic client

command_id	ID of the command (first 2 bytes: device ID, last 2 bytes: sequence number)
flags	Actuator Command flags as defined by the ActuatorCyclic service

© 2025 Kinova inc. All rights reserved.

position	Desired position of the actuator (°)
velocity	Desired velocity of the actuator (°/s)
torque_joint	Desired torque of the actuator (Nm)
current_motor	Desired current applied to the motor (A)

Table 59: Content of the Command structure defined by the InterconnectCyclic client

command_id	ID of the command
status_flags	Status flags
gripper_command	Command structure as defined by the GripperCyclic client

Table 60: Content of the Command structure defined by the GripperCyclic client

command_id	ID of the command
flags	Flags
motor_cmd	An array of MotorCommand objects as defined by the GripperCyclic client (one object for each finger of the gripper)

Table 61: Content of the MotorCommand structure defined by the GripperCyclic client

motor_id	Motor ID
position	Desired position of the gripper fingers (%)
velocity	Desired velocity of the gripper fingers (% of max value)
force	*Deprecated - unused*

Waypoint trajectories

Kinova Kortex API version 2.3.0 released with the concept of **Waypoint trajectories**, which can be used to make the robot follow a trajectory of multiple points and smoothly transitioning between them without stopping.

`ExecuteWaypointTrajectory(WaypointList)` is a method made available by the *Base* service that makes the robot execute a *trajectory* defined by a **waypoint list**.

© 2025 Kinova inc. All rights reserved.

A **waypoint list** contains an array of one or more **waypoints**, as well as a boolean flag labeled *use_optimal_blending* , which automatically smooths the transition between waypoints to minimize the total time to execute the trajectory.

A **waypoint** is defined by a name, which can be configured, and a **waypoint type**, which has to be either an **AngularWaypoint** or **CartesianWaypoint.** Note that a waypoint list can only contain waypoints of a single type.

Angular waypoints

Angular waypoint trajectories are defined by a series of joint poses, defined in degrees, interpolated using cubic splines.

Each angular *waypoint* in the list is associated with a configurable **duration**, which defines how much time the *trajectory* takes to reach the waypoint. Each waypoint can also define **maximum velocities**, which are constraints that must be maintained by each *joint* to reach the associated point.

Cartesian waypoints

Cartesian waypoint trajectories are defined by a series of Cartesian poses. Each waypoint can define its pose in a **reference frame**, as defined by the *Common* API service.

Optionally, maximum linear and angular velocities can be set as constraints during the motion to reach a given *waypoint*. Note that these constraints are *maximum* values only. Should there not be enough space between two waypoints to accelerate to this speed, it is normal that this speed is not reached.

When generating the *trajectory*, the robot moves in a straight line from one waypoint to the next waypoint, until the distance between the *TCP* of the robot and the next waypoint becomes smaller than the value defined as the **blending radius**. When the distance is smaller than the *blending* radius, the robot starts moving toward the waypoint after that on the list.

© 2025 Kinova inc. All rights reserved.

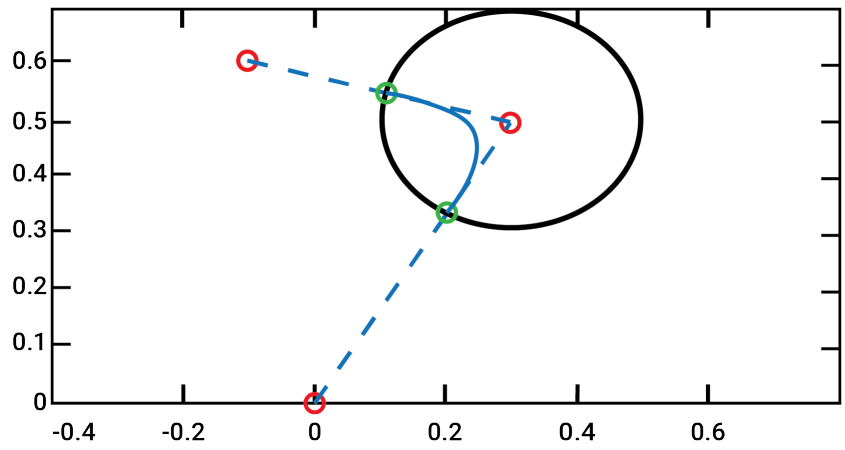

Figure 38: Trajectory of robot moving from point A to point C using a blending radius on point B

Validation of a waypoint list

The API Base service provides a method called `ValidateWaypointList(WaypointList)`.

After running this method, the robot returns a **WaypointValidationReport**. When the *use_optimal_blending* flag is set to true for the *waypoint* list, the report includes a copy of the waypoint list with the optimal *blending* radii set for each waypoint.

In addition to the *trajectory*, the **WaypointValidationReport** contains a **TrajectoryErrorReport**, which in turn contains a **TrajectoryErrorElement** for each error identified in the trajectory during validation.

© 2025 Kinova inc. All rights reserved.

Configurations and safeties

Configurable parameters

There are a number of parameters of the robot that are configurable to customize the operation of the robot. These can be configured using the API and Kortex Web App.

These parameters can be configured using the appropriate Kinova™ Kortex® APIs. For more details on how to perform configuration using the APIs, see the *API* documentation.

Some of these parameters can also be configured using the Kortex Web App GUI, which can be accessed as follows:

1. Open the Kortex Web App.
2. Navigate to the **Robot Configurations** page.
3. Access configurable parameters on one of the available tabs.

The following tables give a summary of the configurable parameters.

Control library configuration

Control library configuration items configure the functioning of the robot control library. These can be configured via the API or the Kortex Web App.

Table 62: Control modes configuration

Configurable item	Description	Where to configure it
Gravity vector	Defines global value for gravitational acceleration vector (x,y,z) in relation to the *base frame* in units of m/s^2. **Note:** Configuration of the *gravity vector* is necessary to mount the robot in arbitrary *orientations* (for example, wall mount, ceiling mount). Accurate configuration of the direction and strength of gravity is important for the robot to properly compensate for torques due to gravity on the robot actuators.	`Kinova.Api.ControlConfig` API Web App > Configurations > Robot > Arm

© 2025 Kinova inc. All rights reserved.

Configurable item	Description	Where to configure it
Tool configuration	• Set Cartesian transform of x, y, z (m) and θ_x, θ_y, and θ_z of *tool frame* in relation to interface module frame. **Note:** The Cartesian *pose* feedback available in base cyclic communications uses the pose of the tool frame in relation to the base frame. The specific choice of the tool frame will therefore impact the readings for the current Cartesian pose. • Set tool mass (kg), and tool mass center position x, y, z (m) **Note:** The mass and *center of mass* of the tool need to be configured for the robot control libraries to properly adapt the control of the robot to the additional mass of the tool.	`Kinova.Api.ControlConfig` API Web App > Configurations > Robot > Arm
Payload configuration	Set *payload* mass (kg) and mass center of payload x,y,z (m) in relation to the tool frame. **Note:** The mass and center of mass of the payload need to be configured for the robot control libraries to properly adapt the control of the robot to the additional mass of the payload.	`Kinova.Api.ControlConfig` API Web App > Configurations > Robot > Arm

© 2025 Kinova inc. All rights reserved.

Configurable item	Description	Where to configure it
Cartesian reference frame	Set the reference frame convention for translation and orientation to use with Cartesian Twist and Wrench commands. There are three options: • Mixed - translation reference frame = base frame and orientation reference frame = tool frame • Tool - tool reference frame used for both translation and orientation reference frames • Base - base reference frame used for both translation and orientation reference frames **Note:** Changing the reference frame convention will affect the readings that are provided for the current Cartesian pose of the tool.	`Kinova.Api.ControlConfig` API Web App > Pose virtual joystick
Soft limits	Set various soft limits for the robot kinematics in a specified control mode: • tool twist linear and angular speed • joint speed (for each *joint*) • joint acceleration (for each joint) **Note:** Soft limits must be less than corresponding robot hard limits	`Kinova.Api.ControlConfig` API Web App > Configurations > Speed Limits
Desired speeds	Set desired speeds for joystick control modes: • tool twist linear and angular speed (in Cartesian joystick) • joint speeds (for each joint, in angular joystick) **Note:** Desired speeds must be less than corresponding soft limits	`Kinova.Api.ControlConfig` API Web App > Pose / Angular virtual joysticks

© 2025 Kinova inc. All rights reserved.

Base configuration

Base configurations cover a range of core configurable items. These can be configured via the API or the Kortex Web App.

Table 63: Base configuration

Configurable item	Description	Where to configure it
User Profiles	Create, read, update and delete user profiles	`Kinova.Api.Base` API Web App > Users
Protection Zone	Create, read, update and delete *protection zone*s (for obstacle avoidance). Configurable parameters are: • enabled/disabled • zone shape type (rectangular prism, cylinder, sphere) • zone origin and *orientation* • zone dimensions • envelope thickness • zone limitation types (velocity) and values • envelope limitation types (velocity) and values	`Kinova.Api.Base` API Web App > Operations > Protection Zones
Control Mapping	Create, read control *mapping*	`Kinova.Api.Base` API Web App > Configuration > Controllers
Action	Create, read, update, delete action	`Kinova.Api.Base` API Web App > Operations > Actions
Sequence	Create, read, update, delete a sequence of actions	`Kinova.Api.Base` API Web App > Operations > Actions
IPv4	Set IPv4 configured (for specified network adapter): • *IP* address • subnet mask • default gateway	`Kinova.Api.Base` API Web App > Configurations > Wireless & Networks

© 2025 Kinova inc. All rights reserved.

Configurable item	Description	Where to configure it
Communication Interface	Enable communication interface: • network type (Wi-Fi or Ethernet) • enabled/disabled	`Kinova.Api.Base` API Web App > Configurations > Wireless & Networks
Wi-Fi	Set: • *SSID* • security key • automatic connection allowed • country code	`Kinova.Api.Base` API Web App > Configurations > Wireless & Networks
Transmission Control Protocol (TCP) bridge to hardware	Enable or disable	`Kinova.Api.Base` API
Restore factory settings	Delete all configurations and reverts settings to factory defaults (except network settings)	`Kinova.Api.Base` API Web App > Configurations > Robot > Arm
Restore factory product configuration	Restore product configuration to factory product configuration	`Kinova.Api.Base` API

Actuators configuration

Actuators configurations set items related to the functioning of the actuators. Most of these can be configured only via the API. Zeroing of the actuators torque offsets can be done via the Kortex Web App.

Table 64: Actuator configuration (`Kinova.Api.ActuatorConfig`)

Configurable item	Description	Where to configure it
Axis offsets	Set actuator axis offset position	`Kinova.Api.ActuatorConfig` *API*
Torque offset	Set actuator torque zero configuration	`Kinova.Api.ActuatorConfig` API Web App > Configurations > Robot > Actuators

© 2025 Kinova inc. All rights reserved.

Configurable item	Description	Where to configure it
Control mode	Set actuator control mode. Options: • position • velocity • current • torque	`Kinova.Api.ActuatorConfig` API
Control loop parameters	Configure an individual control loop parameter: • *joint* or motor position • joint or motor velocity • joint torque • motor current Configure: • error saturation value • output saturation value • kAz • kBz • error dead band value	`Kinova.Api.ActuatorConfig` API
Vector drive parameters	Set vector drive parameters: • kpq • kiq • kpd • kid	`Kinova.Api.ActuatorConfig` API
Encoder derivative parameters	Set encoder derivative parameters: • maximum window width • minimum encoder tick count	`Kinova.Api.ActuatorConfig` API
Command mode	Set command mode. Options: • cyclic - cyclic data only • asynchronous - configuration messages only • cyclic jitter compensation using position or position and velocity inputs **Note:** These options are available in the API but should NOT be used	`Kinova.Api.ActuatorConfig` API

© 2025 Kinova inc. All rights reserved.

Configurable item	Description	Where to configure it
Servoing	Enable servoing	`Kinova.Api.ActuatorConfig` API

Interface configuration

Interface configurations impact settings for interface expansion signals. These can be configured via the API or the Kortex Web App.

Table 65: Interface configuration (`Kinova.Api.InterconnectConfig`)

Configurable item	Description	Where to configure it
UART communications	Configure interface UART - enable/disable, speed, word length, stop bits, parity	`Kinova.Api.InterconnectConfig` *API* Web App > Configurations > Robot > Interconnect
Ethernet communications	Configure interface Ethernet port - speed, duplex mode	`Kinova.Api.InterconnectConfig` API Web App > Configurations > Robot > Interconnect
GPIO	Configure interface GPIOs - mode, pull mode, value, default value	`Kinova.Api.InterconnectConfig` API Web App > Configurations > Robot > Interconnect
I2C	Configure interface I2C - enable / disable, mode, addressing mode	`Kinova.Api.InterconnectConfig` API Web App > Configurations > Robot > Interconnect

Device configuration

Device configurations impact settings for robot devices. These can be configured via the API.

Table 66: Device configuration

Configurable item	Description	Where to configure it
Run mode	Set device run mode (Run, Calibration, Configuration, Debug, Tuning)	`Kinova.Api.DeviceConfig` *API*

© 2025 Kinova inc. All rights reserved.

Configurable item	Description	Where to configure it
IPv4 settings	(For devices other than *base*) Set device IPv4 address, subnet mask, default gateway	`Kinova.Api.DeviceConfig` API
Safeties	Enable/disable, set warning and/or error thresholds for specific *safeties*	`Kinova.Api.DeviceConfig` API

Vision configuration

Vision configurations tune the settings for the vision module color and depth sensors. These can be configured via the API or the Kortex Web App.

Table 67: Vision configuration

Configurable item	Description	Where to configure it
Sensor settings	Set several discrete vision sensor settings: **Color sensor** • resolution - 320 x 240, 640 x 480, 1280 x 720, 1920 x 1080 • frame rate - 15 or 30 fps • bit rate - 10, 15, 20, or 25 Mbps **Depth sensor:** • resolution - 424 x 240, 480 x 270 • frame rate - 6, 15, or 30 fps **Note:** Higher frame rate or resolution requires a higher data rate for best results	`Kinova.Api.VisionConfig` *API* Web App > Configuration > Robot > Vision
Focus actions	Perform a focus action on a sensor. **Note:** Only supported for color sensor • Start / pause continuous focus • Focus now • Disable focus • Set to focus on x,y point within sensor view pixel coordinates • Set a manual focus distance between infinity and a close plane	`Kinova.Api.VisionConfig` API

© 2025 Kinova inc. All rights reserved.

Configurable item	Description	Where to configure it
Sensor options	Set the value of any **one** of a number of camera settings options. **Color image settings**: • brightness • contrast • saturation	`Kinova.Api.VisionConfig` API
	Depth camera settings • exposure • gain • enable auto-exposure • visual presets • frames queue size • enable error polling • enable output trigger • depth unit setting in m • stereo depth camera baseline distance in mm	`Kinova.Api.VisionConfig` API

Intrinsic parameters	Set the intrinsic parameters for a chosen sensor:
	• resolution
	• principal point - horizontal and vertical coordinates of principal point of image, as pixel offsets from left and top edge respectively
	• focal length - horizontally and vertically as multiple of pixel width and height
	• distortion coefficients
	  • k1 - first radial distortion coefficient
	  • k2 - second radial distortion coefficient
	  • k3 - third radial distortion coefficient
	  • p1 - first tangential distortion coefficient
	  • p2 - second tangential distortion coefficient
		`Kinova.Api.VisionConfig` API

© 2025 Kinova inc. All rights reserved.

Configurable item	Description	Where to configure it
Extrinsic parameters	Set sensor extrinsic parameters: • rotation matrix from depth to color sensor • translation *vector* from depth to color sensor	`Kinova.Api.VisionConfig` API

Safety items

There are a number of safety items related to different components of the robot. These are viewable in the Kortex Web App **Safeties** page.

Overview

Safety items, and their associated warning and error thresholds are active on the robot and are viewable within the **Safeties** page of the Kortex Web App. There are several categories of *safeties*:

- Base (arm) safeties
- Actuators safeties
- Interface module safeties

The tables that follow give more information about the safeties, including:

- **Description** - significance of the safety item
- **Hard limit (lower)** - the minimum allowable value for the item
- **Hard limit (upper)** - the maximum allowable value for the item
- **Default warning / error threshold** - default configurations for the safety thresholds.

Base safeties

The following Base-related Safety items are viewable in the Kortex Web App.

Table 68: Base Safety items

Safety Item	Description	Hard limit	lower / upper	Default threshold	warning / error
Firmware Update Failure	Indicates a failure in the firmware update process.	n/a		n/a	
Maximum Ambient Temperature	The ambient temperature is above upper limit	0.0 °C		70.0 °C	
		90.0 °C		80.0 °C	

© 2025 Kinova inc. All rights reserved.

Safety Item	Description	Hard limit	lower / upper	Default threshold	warning / error
Maximum Core Temperature	The core temperature is above upper limit	0.0 °C		75.0 °C	
		100.0 °C		85.0 °C	
Joint Fault	At least one *joint* is in a fault state	n/a		n/a	
Joint Detection Error	The number of detected joints does not match the configured arm joint count.	n/a		n/a	
No kinematics support	The kinematic model of the robot is corrupt and cannot be loaded.	n/a		n/a	
Network error	Loss of actuator packet data response	n/a		n/a	
Network Initialization Error	Arm is detected but control bus link is down	n/a		n/a	
Maximum Current	The base current reading is above upper limit	0.0 A		9.0 A	
		12.0 A		10.0 A	
Minimum Voltage	The base voltage reading is below lower limit **Note:** The minimum voltage must be lower than the maximum voltage	16.0 V		18.0 V	
		24.0 V		16.0 V	
Maximum Voltage	The base voltage reading is above upper limit. **Note:** The maximum voltage must be higher than the minimum voltage	24.0 V		30.0 V	
		31.0 V		31.0 V	

© 2025 Kinova inc. All rights reserved.

Safety Item	Description	Hard limit	lower / upper	Default threshold	warning / error
Emergency Stop Activated	Emergency stop activated. **Note:** electronic protection cannot be deactivated	n/a		n/a	
Emergency line activated	Emergency line activated	n/a		n/a	
Inrush Current Limiter Fault	Inrush current limiter fault triggered. **Note:** electronic protection cannot be deactivated	n/a		n/a	
NVRAM corrupted	Non-volatile memory corrupt	n/a		n/a	
Incompatible firmware version	Firmware incompatible with hardware board revision	n/a		n/a	
Power-on self test failure	The robot failed a power-on self test	n/a		n/a	
Discrete input stuck active	Joystick Control indicator (GPI) stuck	n/a		n/a	

© 2025 Kinova inc. All rights reserved.

Actuator safeties

The following actuator-related Safety items are viewable in the Kortex Web App.

Table 69: General actuator safety items (apply the same to all actuator sizes)

Safety Item	Description	Hard limit	lower / upper	Default threshold	warning / error
Following Error	The error between the command and the reported position is above upper limit. **Note:** Only active when in servoing state	0°		3.0°	
		10°		5.0°	
Magnetic Position	Position step of more than threshold °/ms has been read on the magnetic sensor.	0°		3.0°	
		20°		5.0°	
Hall Sequence	Invalid Hall sequence detected.	n/a		n/a	
Input Encoder Hall Mismatch	The Hall sensor position value doesn't match the input optical encoder position within +/- threshold degrees.	0°		1.5°	
		10°		2.0°	
Input Encoder Index Mismatch	Input encoder index position mismatch	0		500	
		2000		1000	
Input Encoder Magnetic Mismatch	The input optical encoder position value doesn't match with the magnetic encoder position within +/- threshold degrees.	0°		10°	
		45°		15°	

© 2025 Kinova inc. All rights reserved.

Safety Item	Description	Hard limit	lower / upper	Default threshold	warning / error
Minimum Voltage	The voltage reading is below lower limit. **Note:** The minimum voltage thresholds must be lower than the maximum voltage thresholds.	16.0 V		18.0 V	
		24.0 V		16.0 V	
Maximum Voltage	The voltage reading is above upper limit. **Note:** The maximum voltage thresholds must be higher than the minimum voltage thresholds.	24.0 V		30.0 V	
		31.0 V		31.0 V	
Maximum Motor Temperature	Motor temp is above upper limit	0.0 °C		60.0 °C	
		80.0 °C		75.0 °C	
Maximum Core Temperature	Core temp above upper limit	0.0 °C		80.0 °C	
		100.0 °C		90.0 °C	
Non-Volatile Memory Corrupted	Non-volatile memory corrupt	n/a		n/a	
Motor Driver Fault	Driver chip reported a major fault **Note:** electronic protection cannot be deactivated	n/a		n/a	
Emergency Line Asserted	Emergency line asserted. Motor drive disabled	n/a		n/a	
Watchdog Triggered	Watchdog was triggered	n/a		n/a	

© 2025 Kinova inc. All rights reserved.

Table 70: Small actuator specific safeties

Safety Item	Description	Hard limit lower / upper	Default threshold warning / error
Maximum Velocity	The computed velocity of the actuator is greater than threshold °/sec.	0 °/s	180 °/s
		250 °/s	200 °/s
Maximum Torque	Torque reading higher than x N·m.	0 N·m	29.4 N·m
		52 N·m	51.3 N·m
Hall Position	Position step of more than threshold °/ms	0°	n/a
		10°	0.4285°
Maximum Motor Current	The measured current of the motor is above upper limit	0.0 A	6.0 A
		8.0 A	7.0 A

Table 71: Large actuator specific safeties

Safety Item	Description	Hard limit lower / upper	Default threshold warning / error
Maximum Velocity	The computed velocity of the actuator is greater than threshold °/sec.	0 °/s	100 °/s
		150 °/s	120 °/s
Maximum Torque	Torque reading higher than x N·m.	0 N·m	56.7 N·m
		105 N·m	104.5 N·m
Hall Position	Position step of more than threshold °/ms	0°	n/a
		10°	0.2145°
Maximum Motor Current	The measured current of the motor is above upper limit	0.0 A	10.0 A
		12.0 A	11.0 A

© 2025 Kinova inc. All rights reserved.

Interface module safeties

The following Interface module-related Safety items are viewable and configurable in the Kortex Web App.

Table 72: Interface Safety items

Safety Item	Description	Hard limit	lower / upper	Default threshold	warning / error
Maximum Motor Current	The measured motor current in the connected 3rd party gripper (if compatible gripper is attached) is above the higher limit. If gripper is not present the safety is disabled.	n/a		n/a	
Maximum Motor Temperature	The motor temperature of the connected 3rd party gripper (if compatible gripper is attached) is above the higher limit. If gripper is not present the safety is disabled.	n/a		n/a	
Minimum Voltage	Voltage reading below lower limit **Note:** minimum voltage thresholds must be below maximum voltage thresholds	16.0 V		18.0 V	
		24.0 V		16.0 V	

© 2025 Kinova inc. All rights reserved.

Safety Item	Description	Hard limit	lower / upper	Default threshold	warning / error
Maximum Voltage	Voltage reading above upper limit **Note:** maximum voltage thresholds must be above minimum voltage thresholds	24.0 V		30.0	
		31.0 V		31.0	
Maximum Core Temperature	Core temperature above upper limit	0.0 °C		80.0 °C	
		100.0 °C		90.0 °C	
Non-Volatile Memory Corrupted	Non-volatile memory corrupt	n/a		n/a	
Emergency Line Asserted	Emergency line asserted. Motor drive disabled	n/a		n/a	
Watchdog Triggered	Watchdog triggered	n/a		n/a	

© 2025 Kinova inc. All rights reserved.

Kinova® Kortex™ Web App User guide

Introduction

Overview of the Kortex Web App section of the user guide.

The following sections describe the Kinova® Kortex™ Kortex Web App. The Kortex Web App is used for controlling, configuring and monitoring the robot.

This pages that follow describe the purpose, layout, and use of the Kortex Web App.

Purpose

The Kortex Web App provides a convenient Web-based GUI for configuring, controlling, and monitoring the robot.

Kortex Web App is a Web GUI (Graphical User Interface) that runs on the robot. This web interface allows users to configure, control and monitor the robot through a web browser interface from a computer connected to the robot over a wired Ethernet or Wi-Fi connection.

Device availability of Kortex Web App

The Kortex Web App is available on desktop computers, tablets, and smartphones.

The Kortex Web App is a responsive web application. It is designed to adapt itself to various aspect ratios and resolutions enabling it to run on multiple platforms that support the Google Chrome browser. This includes:

- desktop or laptop computer
- tablet computer
- smartphone

© 2025 Kinova inc. All rights reserved.

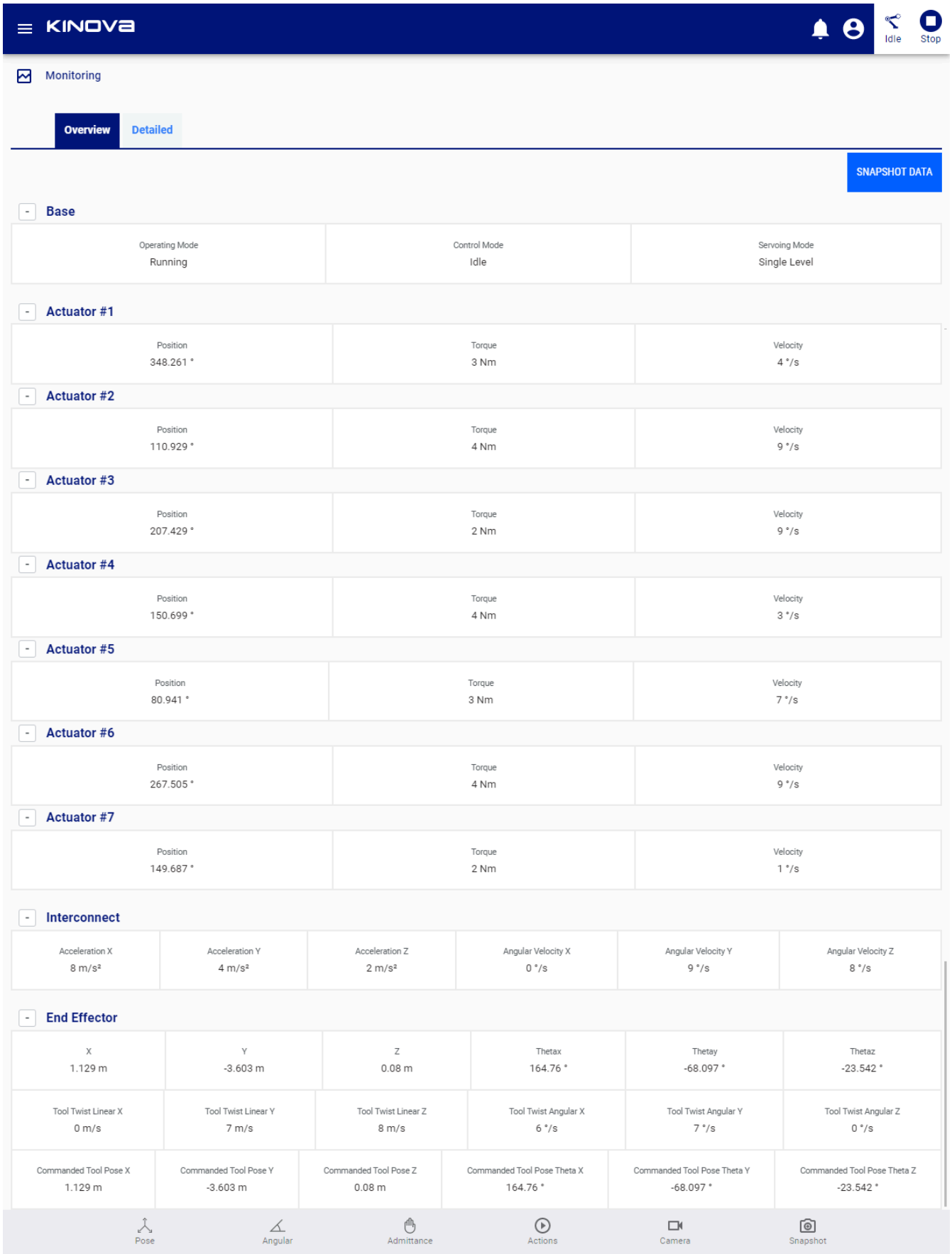

Figure 39: Desktop

© 2025 Kinova inc. All rights reserved.

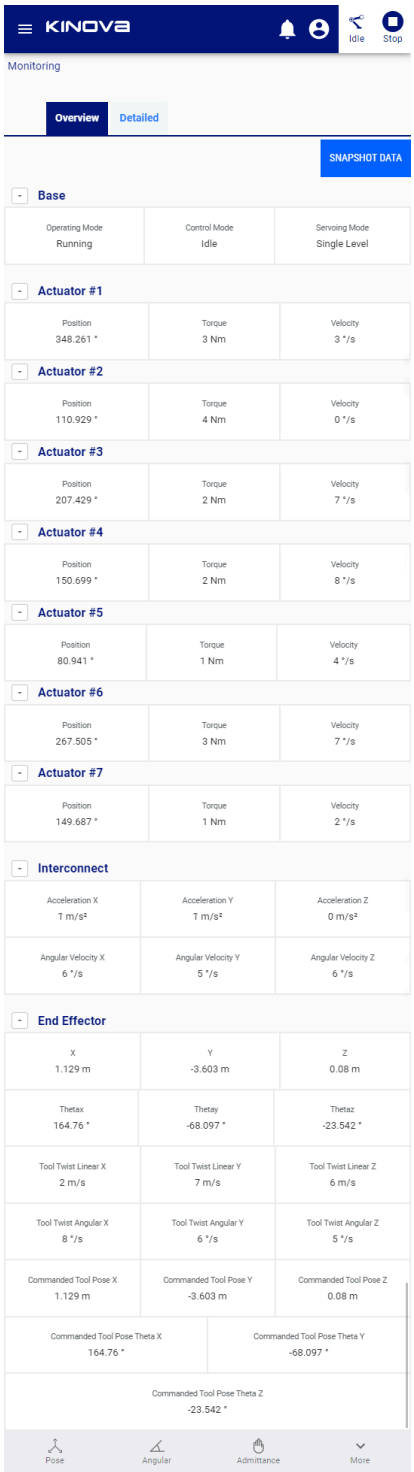

Figure 40: Tablet

© 2025 Kinova inc. All rights reserved.

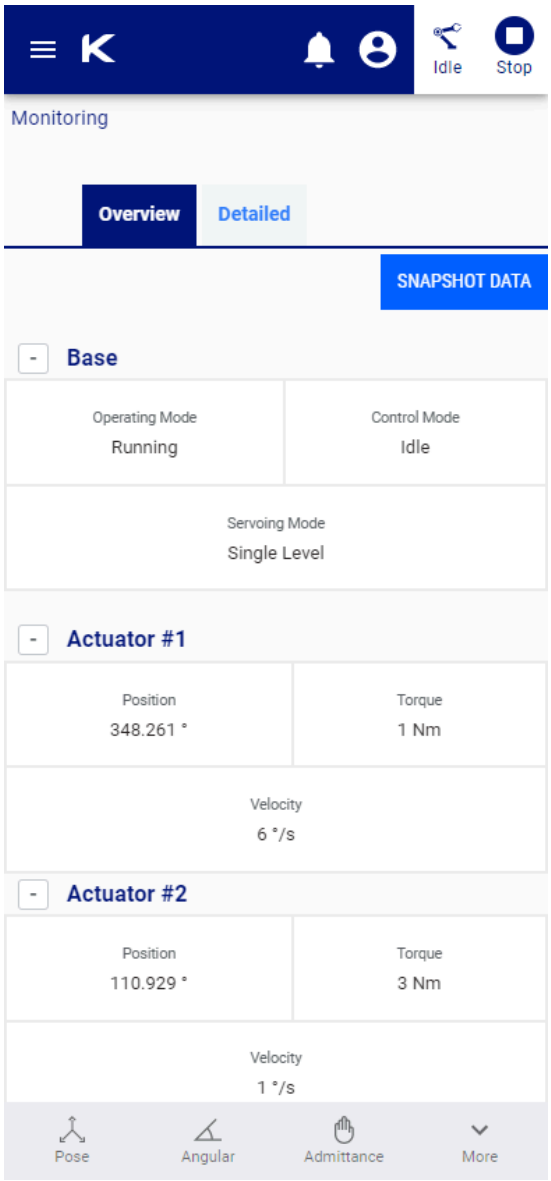

Figure 41: Smartphone

Platform and browser support

This section describes platform and browser support for the *Web App*.

The Kortex Web App has the following platform and browser support.

Operating system support

Kortex Web App is supported on various operating systems (OS).

- Google Chrome version 64+
- Microsoft Windows 7/10 (32-bit or 64-bit)

© 2025 Kinova inc. All rights reserved.

- Ubuntu LTS 16.04 (64-bit) and later
- Android 8.1 and higher

Kortex development computer platform

The hardware and OS requirements for a development computer are multi-platform.

- Microsoft: Windows 7/10 (32-bit or 64-bit)
- Linux: Ubuntu 16.04 (64-bit) and later

Browser support

- Chrome

Other platforms and browsers are not tested; some features may work differently in those cases.

User login

Given the robot base *IP* address and a computer connected to the robot, users can log in to the Kortex Web App with username and password via a Web browser.

After establishing a network connection between your device and the robot, open a web browser and enter the IP address for the robot *base* external interface.

The *Web App* will launch, ending in a login popup.

Enter your username and password and press the CONNECT button.

The default username and password for the robot are:

- username: `admin`
- password: `admin`

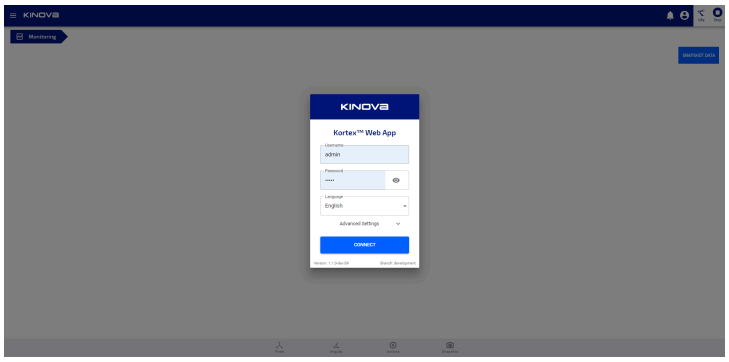

Figure 42: User login

© 2025 Kinova inc. All rights reserved.

On pressing CONNECT, the Kortex Web App will launch and initialize. While it is doing this, the Kortex Web App will give visual feedback to the user on the status of initialization of the application.

Figure 43: Initializing...

Kortex Web App layout and navigation

This section describes the basic layout and navigation of Kortex Web App.

The Kortex Web App screen is divided into several main sections:

- Main navigation panel
- Main information panel
- Notification bar
- Shortcuts panel
- Robot control panel
- Mode indicator, user icon, and stop

© 2025 Kinova inc. All rights reserved.

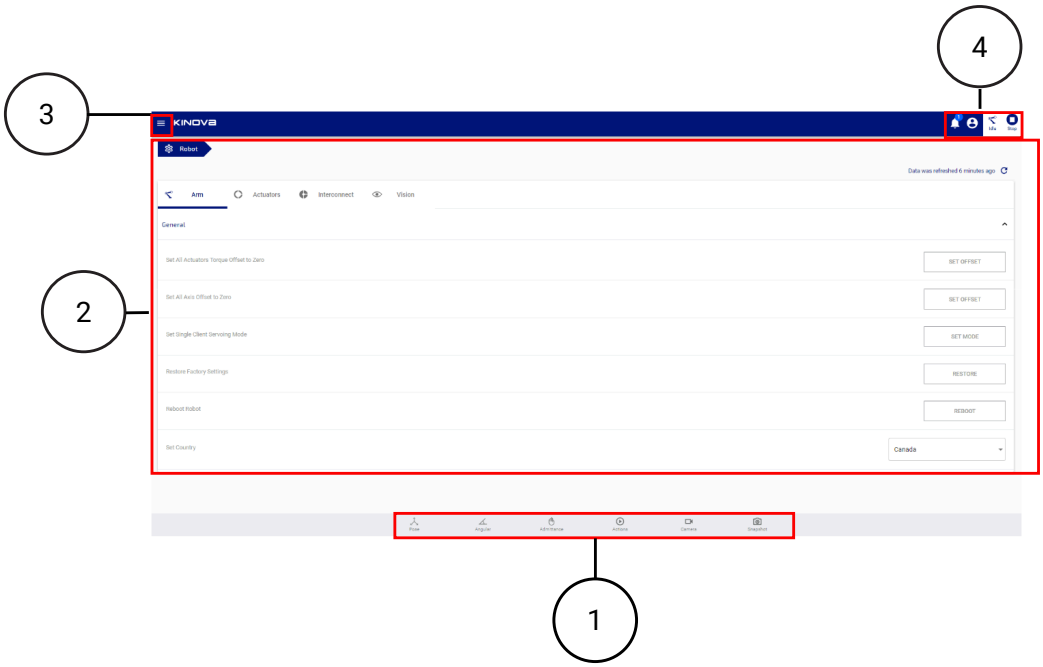

Figure 44: Web App Layout

1	Pages menu
2	Main information panel
3	Robot control panel
4	Notifications indicator, user icon, mode indicator, stop

Pages menu

In the middle of the screen is the main information panel containing the contents of each page of the application. The page can be changed from a pages menu on the left of the screen. This menu is hidden by default, but can be launched by clicking / tapping the menu icon in the upper left.

© 2025 Kinova inc. All rights reserved.

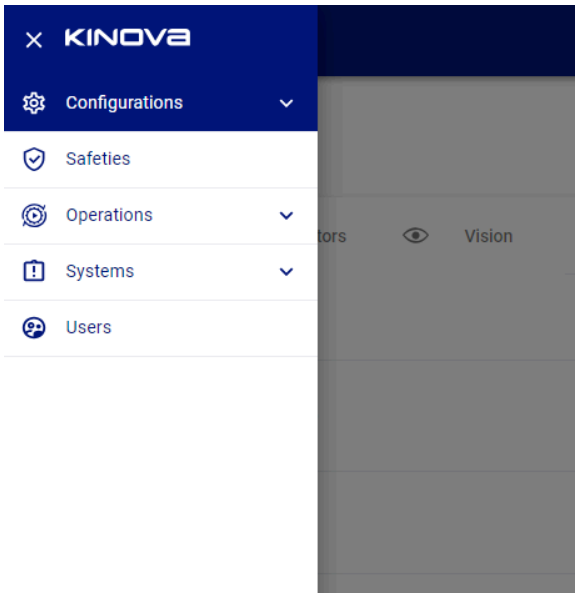

The page options are organized into groups:

- Configurations
  - Robot
  - Controllers
  - Wireless & Networks
- Safeties
- Operations
  - Actions
  - Protection Zones
  - Camera
- Systems
  - System Information
  - Monitoring
  - Upgrade
- Users

In the upper right hand corner of the screen are four indicators/controls:

- Notifications indicator - number of most important *notifications*. Clicking allows notifications to be read.
- User profile icon - Shows the user session icon

© 2025 Kinova inc. All rights reserved.

- Control mode - status of the control mode situation of the robot. There are four icons to indicate the mode / state:
  - Warning - robot in warning state
  - Error - robot is in a fault state
  - Idle - robot is not currently being controlled by any user session; waiting
  - Playing - a sequence is being played on the robot
  - Running - the robot is being actively controlled by a user
  - Admittance - robot is being controlled in an admittance mode
- Stop - button control which, when tapped, stops the arm from moving.

Clicking on any of these items displays a pop-up showing further information.

Robot control panel

The control panel is on the bottom of the screen, and consists of a group of six buttons. Three are to launch pop-up windows for virtual joystick controls and *admittance* mode toggles:

- Pose Virtual Joystick
- Angular mode control
- Admittance controls

The virtual joysticks allow you to control the movement of the robot without the use of a physical controller.

Admittance mode lets you to move the robot with your hands in one of three (Cartesian, *joint*, and *null space*) admittance modes.

In the same area there are three other controls:

- Play action - brings up a window to play a selected action
- Camera feed - brings up a window to view camera feed
- Snapshot - allows user to capture a Cartesian, angular, or gripper *pose*

Clicking on one of the buttons in the robot control panel will launch a smaller window from the bottom of the screen, revealing the selected control panel.

Clicking the same button again will clear the smaller window at the bottom.

© 2025 Kinova inc. All rights reserved.

Robot control panel

Pose virtual joystick control

The Pose virtual joystick provides an interface to control Cartesian movement of the robot from the Kortex Web App.

The Pose virtual joystick panel allows users to control the position and *orientation* of the *end effector* through the Kortex Web App using a mouse (on laptop or desktop computer) or touch control (on a tablet or smartphone).

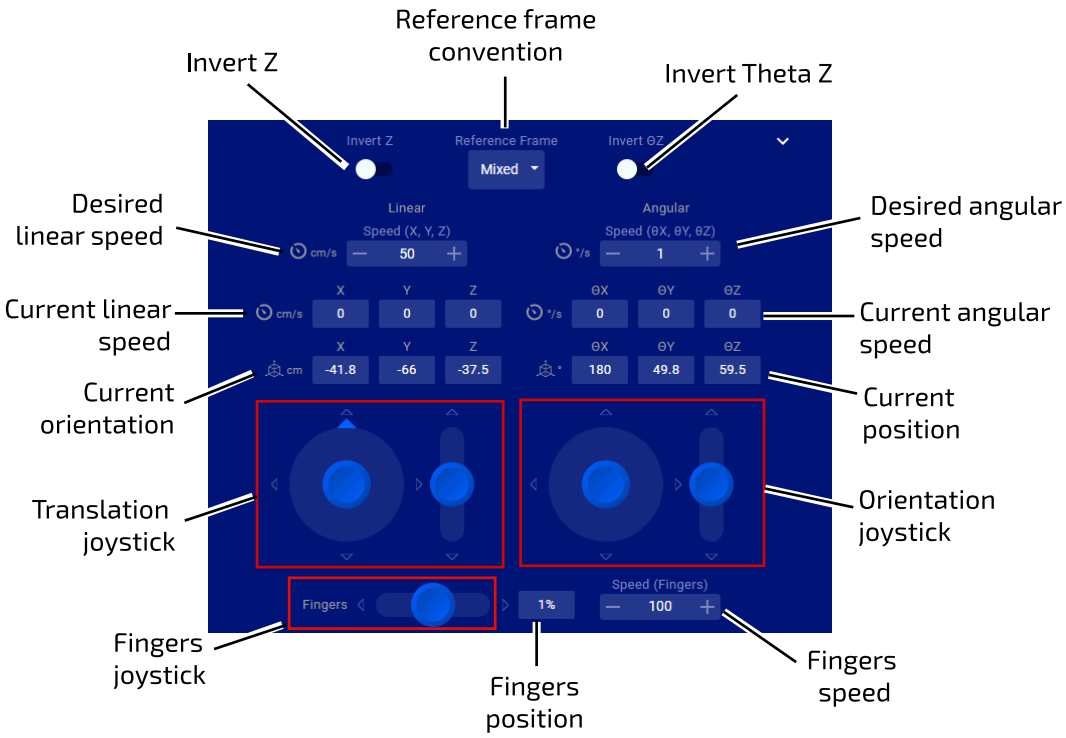

Figure 45: Pose joystick panel

The Pose virtual joystick panel is launched by clicking the first button (Pose) on the robot control panel.

Translation / rotation joystick controls

The Pose virtual joystick controls allow you to control the linear and angular motion of the tool. There are two sets of joysticks:

- linear (to apply a translational motion to the end effector)
- angular (to apply a rotational motion to the end effector at the current position)

© 2025 Kinova inc. All rights reserved.

Each set of joysticks features a 2-axis joystick for controlling the x and y axes, and a 1-axis joystick to control in the z-axis. For the 2-axis linear joystick, the user can configure the joystick *axis* that is assigned to control the y direction movement.

The desired linear and angular speeds for the motion can also be configured here.

Note: The desired speeds must be less than the defaults for Cartesian *twist* speeds, or, if set, the general or mode-specific Cartesian speed limits configured on the **Speed Limits** page.

As the controls are moved, a display is provided for the current position (x, y, z) and orientation (θ_x, θ_y, θ_z) of the end effector.

Note: The orientation representation uses an x-y-z extrinsic convention.

Finger controls

It is possible to open and close the fingers using a single 1-axis joystick control (if a gripper is installed). Push the control up to open the fingers and down to close. The fingers position can be controlled between 0% (fully closed) and 100% (fully open).

Additional settings

By clicking the caret icon on the upper right-hand side, additional controls and displays are revealed.

- current linear and angular velocity display
- invert z and θ_z toggles
- reference frame selection
- gripper speed control
- speed limit

Speed control

The actuators speed and finger speed can be adjusted between 0 and 100% of the hard limits for the robot.

Reference frames

The position of the end effector can be specified in one of three reference *frame* conventions:

- Mixed - linear in base reference frame, angular in tool reference frame
- Base - linear and angular in base reference frame
- Tool - linear and angular in tool reference frame

© 2025 Kinova inc. All rights reserved.

The **tool** reference frame convention is useful when controlling the robot using visual feedback from the camera sensors. The joystick will control movement of the end effector with respect to the tool reference frame, which is parallel to the reference frame of the camera. This makes it easy to command the robot in relation to what is seen through the camera.

Z and θ_z toggles

The default for the 1-axis z-direction controls is that 'up' increases the z-position or z-angle, while 'down' decreases it. This can be reversed using the Invert Z and Invert θ_z toggles.

Angular virtual joystick control

The Angular virtual joystick provides an interface to control the join by joint movement of the robot from the Kortex Web App.

The angular virtual joystick panel allows users to control the robot *joint angles* and gripper fingers (if gripper installed) through the Kortex Web App using a mouse (or touch control on a tablet or smartphone).

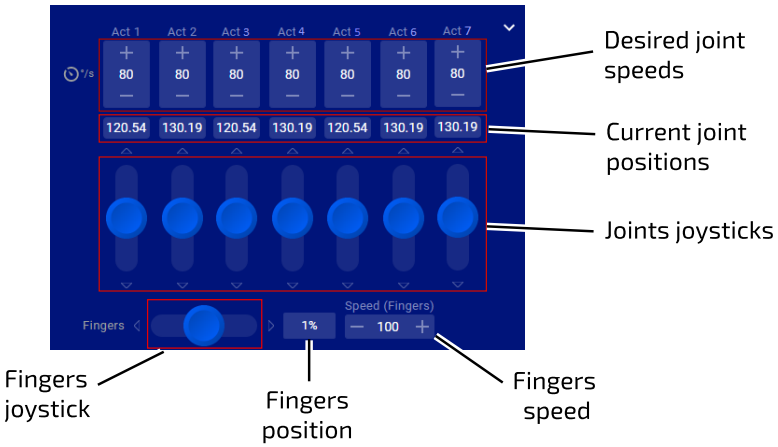

Figure 46: Angular virtual joystick panel

The joint angles are controlled through angular velocity (controlling the joint speed for each actuator)

The angular joystick panel is launched by clicking the second button on the robot control panel.

The virtual joystick controls allow you to control the angle of each actuator as well as the opening and closing of the fingers (if a gripper is installed). As the virtual joystick controls are manipulated, the robot arm *joints* respond accordingly.

© 2025 Kinova inc. All rights reserved.

Note: For joints with joint rotation limits, the robot enforces software joint angle limits to prevent these joints from reaching the physical limits. When you control these joints, the software will cause the arm joints to stop responding when the limits are reached.

The value of each angle is displayed in degrees. The value displayed is restricted to one full rotation (0 - 360°).

Additional settings

By clicking the caret icon on the right-hand side, additional controls are revealed. These let the user control the maximum actuators and finger speed, between 0 and 100% of maximums.

To control the angle of each actuator, use the virtual joystick controls to apply a velocity in the given direction. Pushing the joystick up causes the angle to increase, while pushing it down causes it to decrease. The further up or down the joystick is pushed, the higher the angular speed for the joint, up to the set limit. The angle will continue to change as long as the joystick is being pushed.

The desired joint speeds for each joint can also be configured here. This controls the speed at which the joints will move to produce the movement.

Note: The desired joint speeds must be less than the defaults for joint speeds, or, if set, the general or mode-specific joint speed limits configured on the **Speed Limits** page.

Another joystick allows users to control the *end effector* finger *position* (if an end effector is installed). The values for the finger state range between 0% (fully closed) and 100% (fully open). Push the joystick to the right to increase the percentage (and open the fingers). Push the joystick to the left to decrease the percentage (and close the fingers).

Virtual joystick keyboard shortcuts

Keyboard shortcuts are available for Kortex Web App virtual joysticks when accessing the *Web App* from a desktop device with keyboard. This serves as an alternate to mouse and touch for controlling the robot via the virtual joysticks.

Introduction

The virtual joysticks for the Kortex Web App are controllable with mouse or touch inputs. Some people (particularly those with a background in *PC* gaming) may find it more natural to control using keyboard shortcuts. If you are accessing the Kortex Web App using a desktop device that has a keyboard (such as a desktop or laptop PC) there are handy keyboard shortcuts available for the joystick controls.

© 2025 Kinova inc. All rights reserved.

Cartesian joysticks keyboard shortcuts

Table 73: Pose translation joystick shortcuts

Control		Shortcut
X translation	+	W
	-	S
Y translation	+	A
	-	D
Z translation	+	Q
	-	E

Table 74: Pose orientation joystick shortcuts

Control		Shortcut key
X rotation	+	I
	-	K
Y rotation	+	L
	-	J
Z rotation	+	U
	-	O

Table 75: Gripper controls (if gripper installed)

Control		Shortcut key
Gripper fingers	open gripper fingers	C
	close gripper fingers	V

Angular joystick keyboard shortcuts

Table 76: Actuators controls

Control		Shortcut key
Actuator 1 angle	+	1
	-	Q

© 2025 Kinova inc. All rights reserved.

Control		Shortcut key
Actuator 2 angle	+	2
	-	W
Actuator 3 angle	+	3
	-	E
Actuator 4 angle	+	4
	-	R
Actuator 5 angle	+	5
	-	T
Actuator 6 angle	+	6
	-	Y
Actuator 7 angle	+	7
	-	U

Put another way, the angles for joints 1-7 can be increased using the keys 1-7 on the top row of the keyboard.

The angles can be decreased using the letter keys QWERTYU on the second row of the keyboard.

Table 77: Gripper controls (if gripper installed)

Control		Shortcut
Gripper fingers	open gripper fingers	C
	close gripper fingers	V

Admittance modes panel

The admittance mode panel of Kortex Web App allows users to set the robot into admittance modes.

The Admittance Mode panel is brought up by clicking the hand icon in the robot control panel. The panel slides up from the bottom of the screen.

Figure 47: Admittance modes panel

© 2025 Kinova inc. All rights reserved.

An *admittance* mode is one in which the control systems of the robot take into account external force / torque feedback from its environment.

From this panel, the arm can be set into one of three types of admittance mode:

- Cartesian admittance mode - tool moves according to the *wrench* (force + torque) applied on the robot
- Joint admittance mode - *joints* of the robot rotate according to the external torques applied at the joint
- Null Space admittance mode - *end effector* stays in the same *position* while the user manipulates the joints of the robot within the *null space*. The robot moves within the null space according to the external torques applied. Available only for legacy 7DoF robots.

It is also possible to take advantage of the admittance mode to manually move the robot into a position and then capture a *snapshot* for future reference (normally, when not in an admittance mode, the joints will resist being manipulated by external forces / torques).

While in admittance mode it is possible to record a Cartesian or Angular position by clicking the snapshot button in the robot control panel.

Actions panel

The Actions panel of the Kortex Web App gives a control panel for the currently selected Action or Sequence.

The Actions panel provides controls to play, stop, or loop a selected Action.

The panel pops up from the bottom of the screen when an Action is selected in the **Actions** page. Clicking the control panel Actions icon will toggle the visibility of the panel.

Camera panel

The Kortex Web App camera panel shows the live color sensor feed from the robot vision module within the Kortex Web App.

The Camera panel streams the live feed from the Kortex Web App color sensor in a pane at the bottom of the Web App screen. This lets you have visual feedback from the perspective of the end of the robot while controlling the robot movement.

© 2025 Kinova inc. All rights reserved.

Snapshot tool

The snapshot tool in Kortex Web App captures and saves one of three types of instantaneous snapshots of the robot / gripper positioning.

The *snapshot* tool lets users capture a snapshot of a current *position*. This is a useful feature to help with building preset sequences (for demos or to capture / program a fixed set of movements).

Pressing the snapshot button reveals a set of three snapshot options:

- Cartesian pose
- Joints position
- Gripper position

Pressing one of the respective snapshot buttons will capture the chosen type of snapshot of the current robot position. This will be saved, and will show up as one of the saved Actions viewable in the Actions page.

Main pages

Configurations page group

The **Configurations** page group of Kortex Web App includes several pages useful for robot configuration.

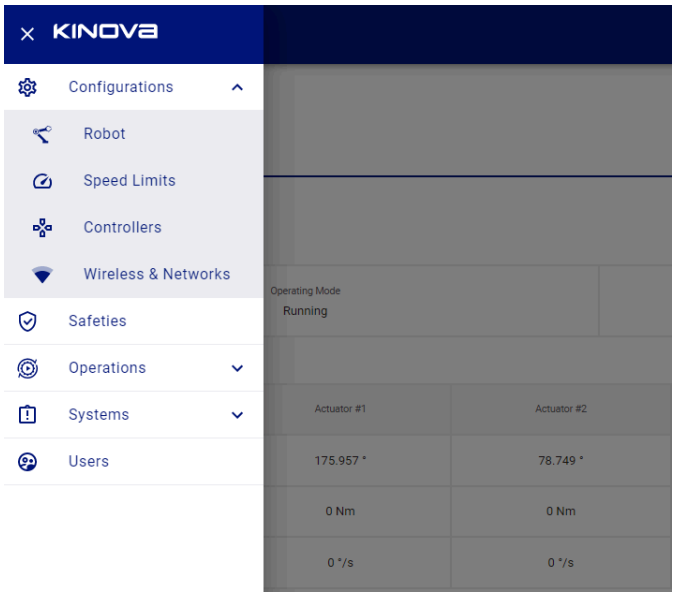

Figure 48: Configurations page group

© 2025 Kinova inc. All rights reserved.

The **Configurations** page group contains pages allowing users to perform preliminary set up and configuration for robot hardware.

This includes the following pages:

- Robot
- Controllers
- Wireless & Networks

Robot configurations

The Robot configurations page of the Kortex Web App allows for the configuration of a broad range of robot parameters.

The Robot configurations page provides a GUI to adjust the configurable parameters of the robot hardware in order to customize its behavior.

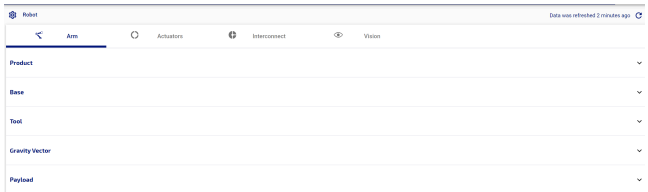

Figure 49: Robot configurations page

The configurable items are broken into sections by devices:

- Arm
- Actuators
- Interconnect (interface module)
- Vision

Some configurable parameters of the robot can be configured on this page. Some other configurable items are handled on their own pages:

- Protection Zones
- Controllers (switch active control *mapping*)
- Actions (define actions)
- Users (edit *user profiles*)
- Wireless & Networks (update network settings)

For more information on configurable parameters, refer to the section on Configurable parameters.

© 2025 Kinova inc. All rights reserved.

Controllers

The **Controllers** page of the Kortex Web App lets users view, select, and create control mappings for the robot..

The **Controllers** page lets you view and toggle between the defined control *mappings* for any physical control devices associated with the robot.

It also lets you define new control **mappings** and **maps** for recognized control devices.

A **mapping** for a control device is a set of **maps**, where each *map* represents one correspondence between the different controls on the control device and the resulting actions produced on the robot.

Each **map** consists of a number of map elements, which represent the combination of a single **control** input and the **function** (action) it produces.

The page gives access to control mappings for control devices with predefined default mappings like the Xbox gamepad and the wrist buttons on the interface module.

Once mappings and maps are defined via the Kortex Web App they can be activated in the Kortex Web App just as with default maps.

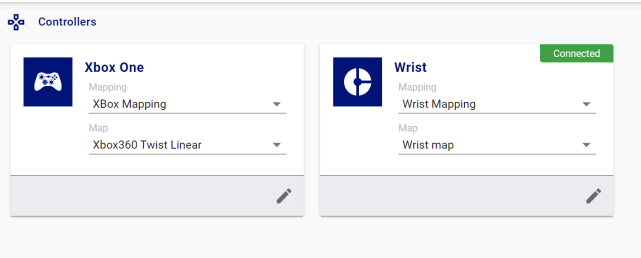

Figure 50: Controllers page

The main information panel of the **Controllers** page has cards for each recognized control device. On each control device card you can:

- view defined control mappings for the device and activate one of the mappings
- view defined control maps for each mapping and activate one of the mappings
- open the **mappings editor** for the control device

On each card, the currently selected mapping and map are shown. Control devices that are currently connected appear with a green "Connected" icon in the upper right hand corner.

The following cards are shown by default:

- Xbox
- Wrist

© 2025 Kinova inc. All rights reserved.

The **Xbox** card is for a generic Xbox gamepad. By default, it has one mapping, **Xbox Mapping**. This mapping has three preset control maps which correspond to the maps that can be toggled using the physical buttons on the gamepad:

- Xbox Twist Linear
- Xbox Twist Angular
- Xbox Joint

The **Wrist** card is for mapping the two buttons on the wrist of the robot arm. By default, it has one mapping, **Wrist Mapping**. This mapping is for the two buttons on the wrist of the robot. This mapping has two preset control maps:

- Wrist map
- Wrist teaching gripper

Mappings editor

The control device mapping editor in the Kortex Web App **Controllers** page allows users to define new control mappings for a control device.

On the Kortex Web App **Controllers** page main screen, clicking the edit button on a control device card opens the **mappings editor** for the device.

In the mappings editor, you can view and modify *mappings* for a control device. This includes:

- creating a new mapping
- adding a new *map* to a mapping
- adding new functions controllable by a map
- assigning control inputs as triggers for functions

Note: Pre-defined default mappings are read only. These mappings can however be duplicated / cloned so that the copy can be edited.

The **selected control device** is indicated at the top of the window.

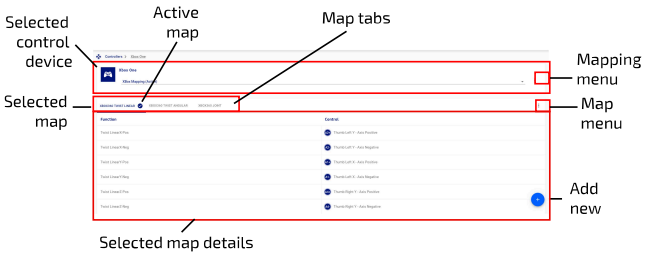

Figure 51: Control mapping edit window

At any given time, one map is set as the active map for the controller. At the top of the edit window is a set of tabs indicating the maps for the control device.

© 2025 Kinova inc. All rights reserved.

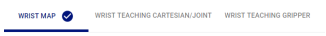

Below the maps tabs is a table showing the **map details** for the selected map. The **selected map** is indicated with a dark blue line under the selected map tab. Clicking on another tab will change the selected map and the details shown below. Information on the map is shown in a table with two columns:

- **Function** - listing defined actions on the robot
- **Control** - listing control inputs on the control device

Each row of the table represents a single map element for the selected map on the selected control device.

The **active map** (the one currently active on the robot, which is not necessarily the one currently displayed) is indicated with a check mark icon.

A **mapping menu** is displayed by clicking the three vertical dots icon to the right of the map tabs, and gives options for the selected map:

- Activate Mapping - makes the selected mapping the active mapping
- Rename - allows you to rename the selected map
- Duplicate - creates a new map that is a duplicate of the selected map
- Delete - deletes the selected map

Note: Since preset mappings are **read only**, Rename and Delete are not available for preset mappings.

A **map menu** is displayed by clicking the three vertical dots icon to the right of the map tabs, and gives options for the selected map:

- Activate Map - makes the selected map the active map
- Rename - allows you to rename the selected map
- Duplicate - creates a new map that is a duplicate of the selected map
- Delete - deletes the selected map

Note: Since preset mappings are **read only**, Rename, Duplicate, and Delete are not available for the maps in preset mappings.

On each row of the table in user-defined maps is a three vertical dot icon. Clicking launches a **map element menu** which gives various options for modifying or adding to the chosen map element:

- Change Function - launch the functions menu to modify the action resulting from the control input
- Assign Control - launch the controls menu to modify the control input

© 2025 Kinova inc. All rights reserved.

- Rename - rename the map element
- Delete - delete the map element from the map

Note: Since preset mappings are **read only**, this is not available for the maps of preset mappings.

The **add new** ( ) button allows you to add, for the selected control device depending on the current context:

- a new mapping
- a new map to an existing mapping
- new functions to an existing map

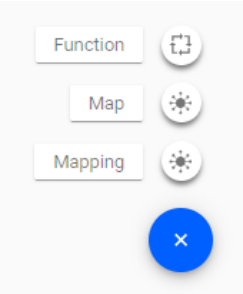

The **Functions** menu is a pop-out menu giving an interface to add one or more **functions** to a selected user-defined map. This launched with + Function.

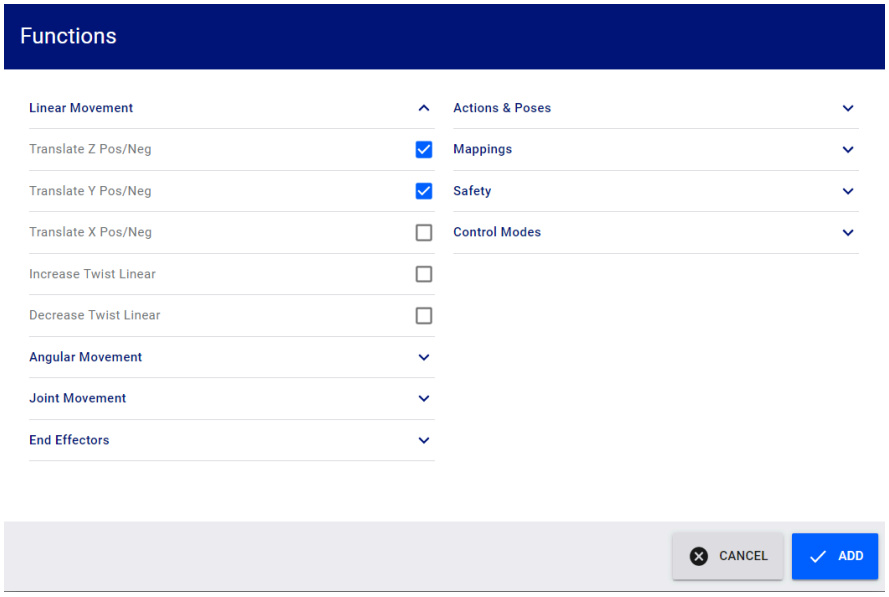

Figure 52: Functions menu

The functions in this menu are divided into groups:

- Linear Movement - translate tool and change speed

© 2025 Kinova inc. All rights reserved.

- Angular Movement - rotate tool around its own center and change rotation speed
- Joint Movement - navigate from *joint* to joint and change joint speed
- End Effectors - open or close gripper fingers
- Actions & Poses - initiate or stop an action, or go to a standard defined *pose* (retract, home, packaging, zero), take a *snapshot*
- Mappings - change to the next or previous map in a mapping for the control device
- Safety - apply emergency stop and clear faults
- Control Modes - toggle *admittance* modes (Cartesian, Joint, Null Space)

The **Controls** menu is a pop-out menu allowing you to assign, for one of the functions in a map, the control input which triggers that function. The Controls menu is launched by selecting **Assign Control** in the map element menu for one of the functions in a map.

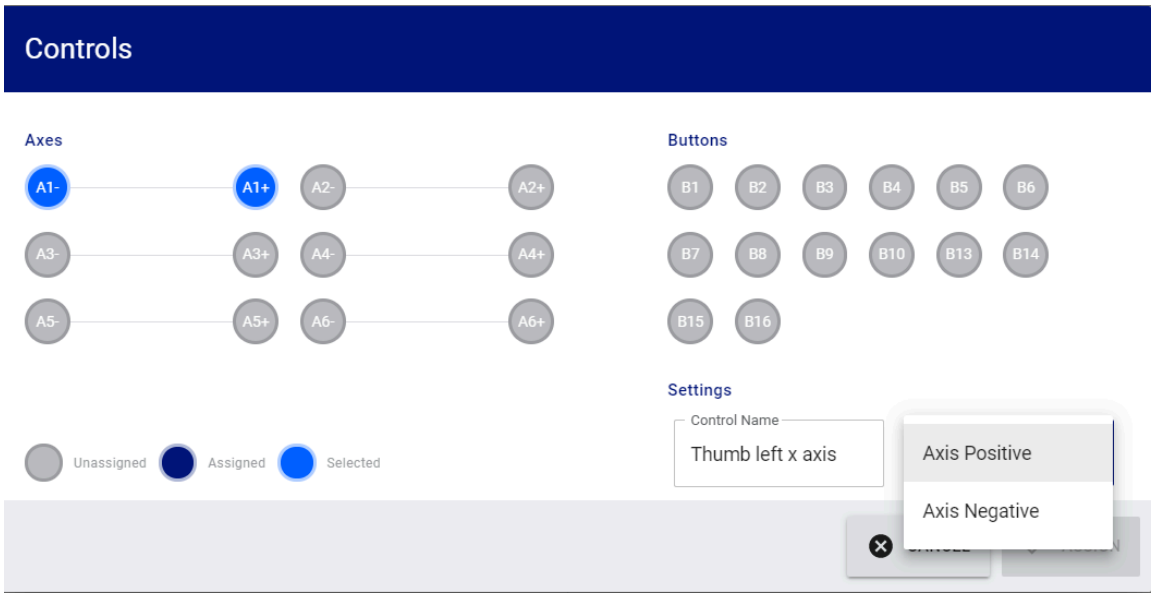

Figure 53: Controls menu

The controls menu shows a graphical representation of all the available controls on the control devices, whether *axis* controls (joystick or D-pad) or button controls. The graphical representation shows which controls have already been assigned, and which are still available.

The specific input for the control used to trigger the function can be specified here.

For an axis control, this means the direction (positive or negative).

For a button control, this means button click, button up, or button down.

© 2025 Kinova inc. All rights reserved.

Creating a new mapping for a control device

Describes steps to create a new mapping for a recognized control device with the Kortex Web App.

About this task

On the Kortex Web App **Controllers** page, users can create and define a new control *mapping* for a connected control device.

Note: Mappings can also be created using the `Kinova.Api.Base` *API*.

Procedure

1. On the Kortex Web App **Controllers** page, locate the card for the desired control device and choose edit on the card to launch the control mapping editor for the device.

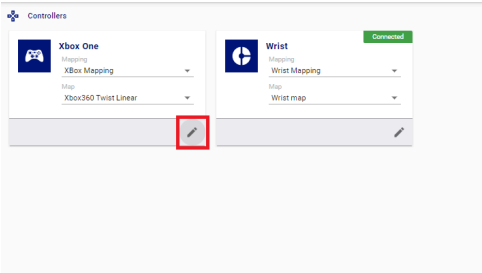

2. Click the **add new** button and select **Mapping** to create a new empty map.

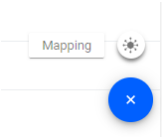

3. A new empty mapping, labeled 'New Mapping' will appear. This mapping contains no maps, and the table of functions and controls is blank.

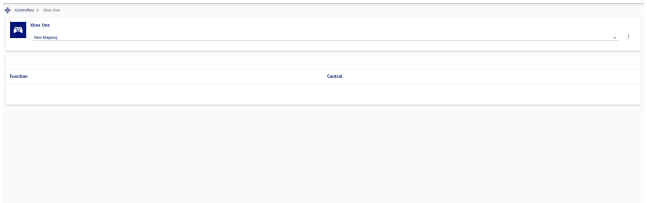

What to do next

Next, you can add and define one or more maps to the mapping by carrying out the 'Creating a new *map* for a mapping' procedure once for each new map you want to add to the mapping.

© 2025 Kinova inc. All rights reserved.

Creating a new map for a mapping

Describes steps to create a new map in a mapping for a recognized control device with the Kortex Web App.

Before you begin

A user-defined **mapping** will already need to have been created for the control device.

About this task

On the Kortex Web App **Controllers** page, you can create and define a new control *map* for an existing *mapping*. The following procedure describes the steps to follow to define a new map.

Note: Control maps can also be defined programmatically using the `Kinova.Api.Base` *API*.

Procedure

1. On the Kortex Web App **Controllers** page, locate the card for the desired control device and click the edit icon on the card to open the control mapping editor for the device.
2. Select the appropriate mapping from the Mapping drop-down menu.
3. Click the **add new** button and select **Map** to create a new empty map. A new tab for the map, labeled 'New Map' will appear. The new map is initially empty, with the functions and controls empty.

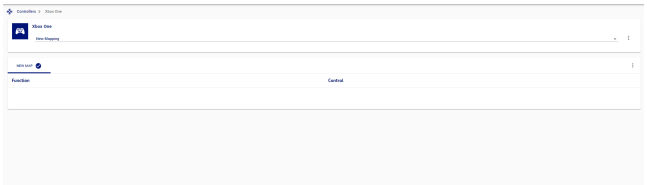

4. If there are other maps in the mapping, click on the tab for the new map to select it. The selected map details will initially be empty, since they haven't been defined yet.

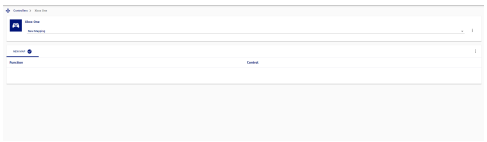

5. Click the **add new** button again, this time selecting **Function**. This will launch the **Functions** menu.

© 2025 Kinova inc. All rights reserved.

6. In the **Functions** menu, different functions are shown arranged in categories. Select the functions you want to add to the new map, and then click **Add**. The added functions will now appear in the selected map details. The functions will appear in the **Function** column, while in the **Control** column, 'No Control Assigned' will appear on each row (this is as expected, since controls have not been assigned yet).

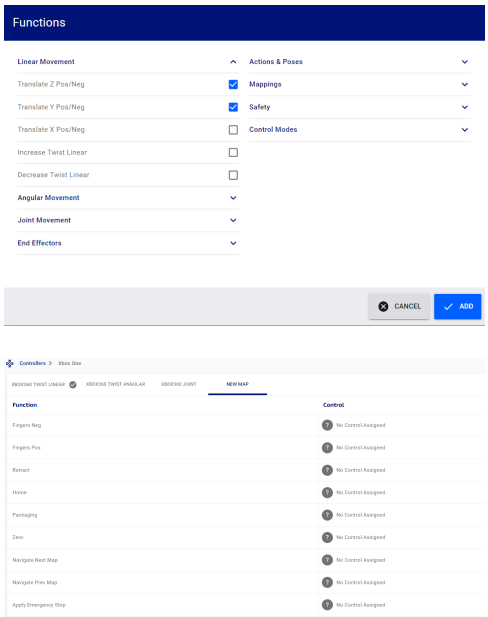

Note: The number of functions you can add to a map will depend on the number of available types of control inputs for the control device.

Note: It is generally recommended, if possible, to add at least one of the functions in the Mappings group (Navigate to Next / Previous Map), as well as the Apply Emergency Stop and Clear Faults functions under the Safety group. This allows you to handle safety and faults, and to navigate easily from map to map using the control device.

7. For any of the functions, click on the **map element menu** and select **Assign Control** from the menu.

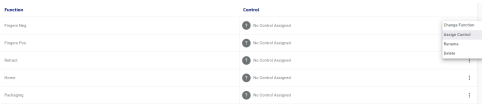

© 2025 Kinova inc. All rights reserved.

8. This will launch the **Controls** menu. Using the controller, press one of the unassigned controls. It will become highlighted on the menu as selected.

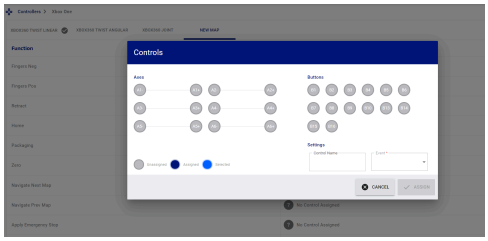

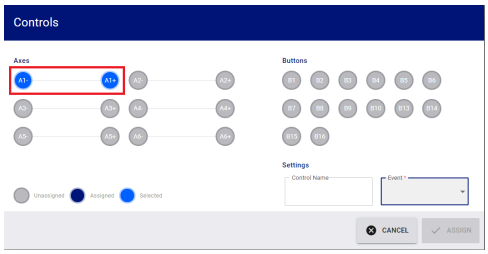

9. In the settings, type in a meaningful name for the control input, and select an *event* for that control. For *axis* controls, the options are Axis Positive / Negative and for button controls, the options are Button Click, Button Up, or Button Down.

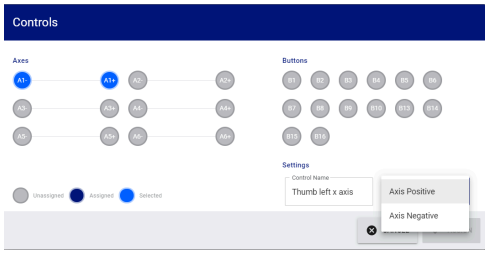

10. When you are happy with the choice, click the **Assign** button. The selected map details will update accordingly.

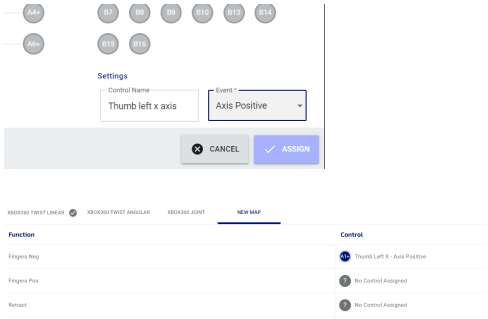

11. Repeat steps 7 through 10 for the remaining functions until all have unique controls assigned.

Wireless & Networks

The **Wireless & Networks** page of the Kortex Web App allows users to configure networks settings.

The **Networks** page is used to set network parameters for:

© 2025 Kinova inc. All rights reserved.

- Ethernet
- Wi-Fi

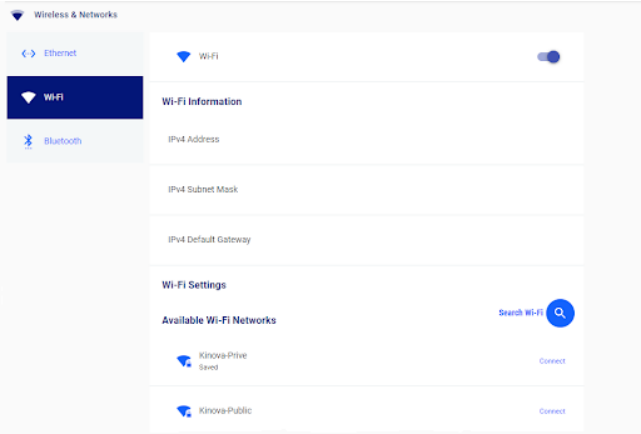

Figure 54: Wireless & Networks page

The page has tabs for each currently available connection method.

The Ethernet Settings tab allows you to configure:

- IPv4 address
- IPv4 subnet mask
- IPv4 default Gateway

From **Wi-Fi**, enable and disable the Wi-Fi transceiver. Enable Wi-Fi networking with the robot, and find and connect to available Wi-Fi networks.

From **Bluetooth**, enable and disable the Bluetooth transceiver.

Safeties

The **Safeties** page of the Kortex Web App allows users to view safety settings on the robot.

The **Safeties** page allows users to view safety thresholds.

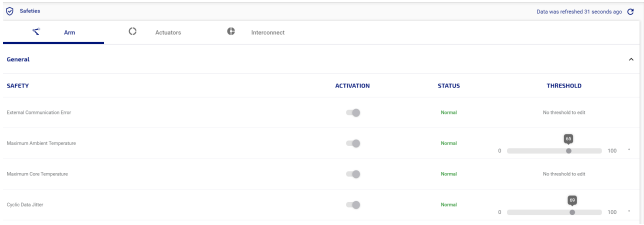

Figure 55: Safeties page

There are two types of safety thresholds:

© 2025 Kinova inc. All rights reserved.

- **Error** - An error is a departure from normal parameters that is more serious than warnings and represents a situation which could damage the robot or endanger the user. The thresholds for errors are set at a more extreme level than warning thresholds.

  Note: An error triggers an emergency stop for the robot.

- **Warning** - A warning serves to signal that the robot is moving away from normal operational status toward an error state. A warning will not stop the robot.

  Note: Some safety items do not have warning thresholds, only error thresholds.

For more detailed information on robot safety thresholds, see here.

Operations page group

The Operations page group of the Kortex Web App groups together pages useful to operating the robot.

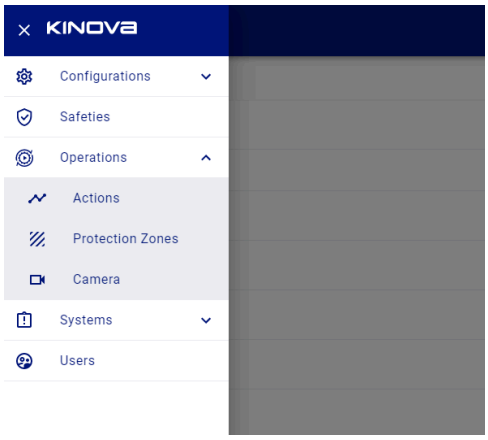

Figure 56: Operations page group

The Operations page group contains pages allowing users to fine tune the configuration and performance of the robot after the initial setup.

This includes the following pages:

- Actions
- Protection Zones
- Camera

© 2025 Kinova inc. All rights reserved.

Actions

The **Actions** page of the Kortex Web App allows the user to define and edit robot actions of various types. It also allows users to play back actions and assemble them together into sequences of action.

The **Actions** page allows user to define, view, and edit robot actions, as well as build sequences and play back actions and sequences.

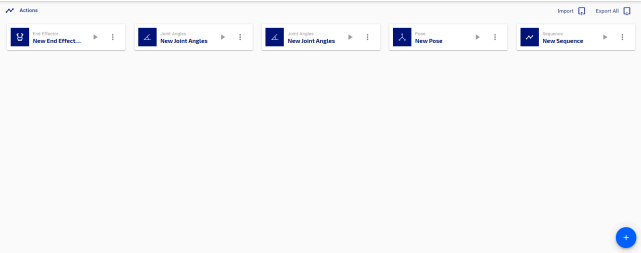

Figure 57: Actions page

Actions available in the Kortex Web App are:

- Pose (go to a Cartesian pose)
- Joint angles (go to a combination of joint angles)
- End Effector (change the gripper state)
- Sequence (take a series of actions one after the other)

A **Pose** represents a single Cartesian endpoint for the robot. A pose consists of x, y, and z coordinates representing the *position* of the *end effector*, and the three angles θ_x, θ_y, and θ_z representing the *orientation* of the end effector.

Note: Orientations are represented in x-y-z extrinsic convention.

Angular represents the set of joint angles for each of the arm *joints*.

End effector represents the gripper state, from 0% (fully open) to 100% (fully closed).

Note: Currently, the Robotiq 2-finger grippers are supported.

A **Sequence** is an ordered list of actions on. Sequences are a sequential combination of Cartesian poses, angular settings, and end effector poses. Sequences may also include timed delays between movements.

The main information panel of the page shows cards with all the defined actions and sequences. New actions or sequences can be added with the + icon in the lower right of the main panel. This launches a menu where you can select the type of new item to create.

© 2025 Kinova inc. All rights reserved.

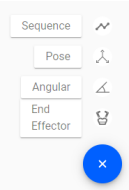

Figure 58: '+' menu

The already defined actions are visible on the **Actions** page as small cards. From these cards, users can do the following with an action:

- edit the action
- create a duplicate of the action
- delete the action
- export action as JSON
- export action as XML

Choosing Edit on an action card opens an editor interface specific to the action type. This allows you to modify the parameters of the action.

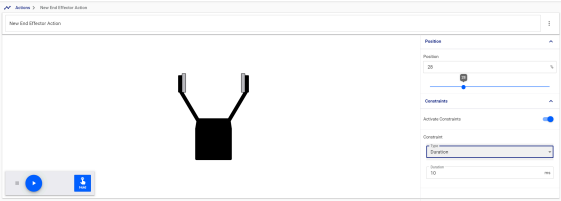

Figure 59: End effector action editor

The end effector action editor allows you to modify the endpoint position of the gripper between 0% (fully open) and 100% (fully closed).

There is also an option to apply a duration constraint, in ms. This controls the time taken for the gripper to complete the movement.

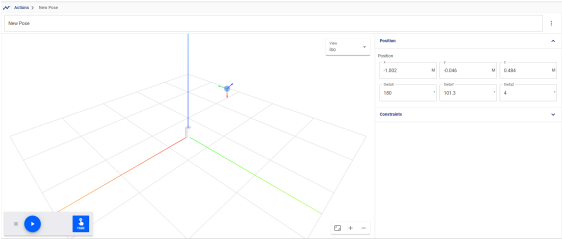

Figure 60: Pose action editor

The pose action editor allows you to modify the endpoint position and orientation of the end effector.

© 2025 Kinova inc. All rights reserved.

There is also an option to apply a translation speed constraint for the movement toward the endpoint.

A basic 3D visualization is displayed showing a representation of the *base* and its *frame*, and a sphere with axes representing the *tool frame* orientation.

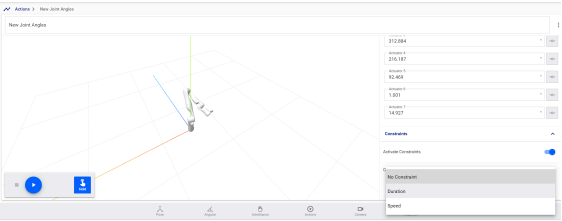

Figure 61: Joint angles action editor

The joint angles action editor allows you to modify the angular position, in degrees, for each actuator on the robot.

A 3D visualization is displayed showing the pose produced by the current angle settings.

There is also an option to apply an angular speed or duration constraint for the movement toward the endpoint.

Creating actions using snapshot tool

The snapshot button (Snapshot) at the bottom of the screen can be used to capture the current robot Cartesian pose, angular pose, or gripper state. Any pose captured by the *snapshot* tool will show up on the **Actions** page. For more information, see the snapshot tool page.

Preset joint angle actions

The robot comes with several preset joint angle actions viewable and playable in the Kortex Web App **Actions** page.

When the robot is shipped, it comes with several useful preset *joint angle* actions. These are viewable and playable on the **Actions** page.

Table 78: Preset joint angle actions

Name	Description
Home	Go to the **home** position, a convenient "ready" *position*. This is the same home position reachable from default Xbox gamepad maps.

© 2025 Kinova inc. All rights reserved.

Name	Description
Retract	Go to the **retract** position, a folded up, compact *pose* for when the robot is not in use. This is the same retract position reachable from default Xbox gamepad maps.
Packaging	Go to the **packaging** position (the arrangement of the robot for packing in the shipping / storage container). This is useful for preparing to put the robot back into the shipping container for transport or storage.
Zero	Go to the **zero** position (all joint angles = 0)

Sequence editor

The sequence editor on the Kortex Web App **Actions** page is used to build and edit sequences of actions.

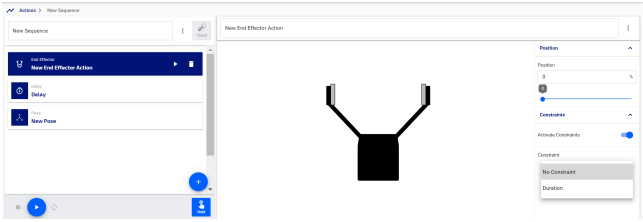

Figure 62: Sequence editor

The sequence editor allows you to:

- create and add a new reach endpoint action (reach Cartesian *pose*, reach joint angles, reach *end effector position*) to a sequence
- add an existing library action to a sequence
- add a delay to a sequence
- reorder actions in a sequence
- edit / configure any actions in the sequence
- enter *teaching mode* and add *snapshots* to the sequence

The sequence timeline shows the steps in the sequence.

Clicking the button brings up a menu to pick a new action to add.

© 2025 Kinova inc. All rights reserved.

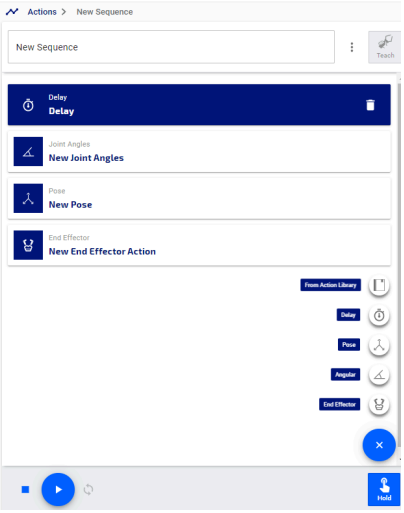

The edit action panel to the right of the sequence list lets you directly edit the parameters of the action.

Adding actions using teaching mode

Within the sequence editor, you can enter **teaching mode** by pressing the "Teach" button in the sequence editor.

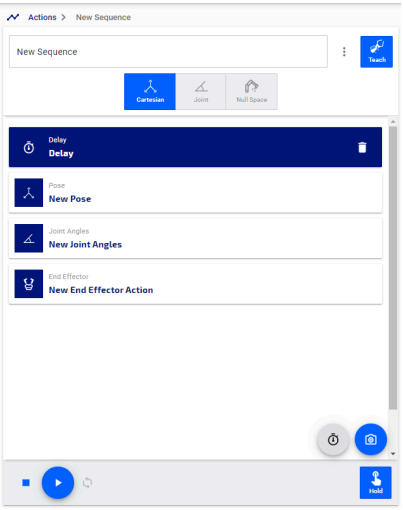

Teaching mode provides a simple interface for placing the robot into one of the available *admittance* modes, allowing users to manipulate the robot by hand and take snapshots.

Snapshots can be captured in one of two ways:

- using the on screen snapshot button that appears when teaching mode is initiated
- using the physical buttons on the interface wrist buttons

© 2025 Kinova inc. All rights reserved.

The type of snapshot taken depends on the admittance mode chosen. In Cartesian admittance, a Cartesian pose snapshot is captured. In joint or *null space admittance*, a *joint angles* snapshot is captured.

If a snapshot is captured, and the gripper position is changed since the previous point in the sequence, both robot position and gripper position snapshots will be captured.

If the gripper position was unchanged, only the robot position will be captured.

If a snapshot is taken for the first point in a sequence, both robot position and gripper position snapshots will be captured.

Teaching / gripper wrist button map

Entering teaching mode changes the control *mapping* of the interface module buttons as follows:

Input	Button 1	Button 2
button click	open gripper	take snapshot
button hold	close gripper	N/A
button release	stop gripper	N/A

Deleting actions or re-ordering the steps of a sequence

If you want to change the position of an action in the sequence, or remove it from the sequence entirely, simply click and drag to move the selected action and release it in the desired position.

To delete a selected action from the sequence, click the delete icon on the action.

© 2025 Kinova inc. All rights reserved.

Creating a new sequence in teaching mode

Describes steps to define a new sequence on the robot using teaching mode within the sequence editor.

Before you begin

The robot needs to be powered on, and in the home position or other stable *position*.

About this task

Teaching mode is a mode that is launched from the Kortex Web App sequence editor. Enabling this mode puts the robot into a selected *admittance* mode and changes the *mapping* of the wrist buttons on the robot interface module. This allows you to freely manipulate the robot by hand and take *snapshots* of *positions* (Cartesian *pose* or *joint* angles, depending on the selected admittance mode) as well as gripper positions. By running through a few positions, a new sequence can easily and quickly be created.

Procedure

1. Connect to the robot via the Kortex Web App and navigate to the **Actions** page.
2. Click the '+' button to create a new action, and select Sequence from the pop up menu. The sequence editor will open with an empty sequence.
3. Click the Teach button and select from the available admittance modes options (Cartesian and Joint for 6 DoF robot, Cartesian, Joint, and Nullspace for 7 DoF robot).

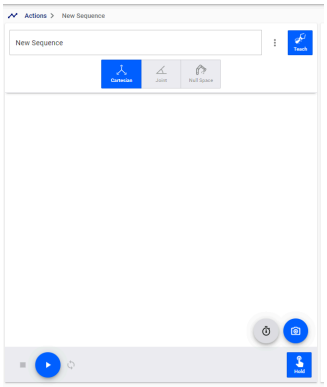

Note: The robot will be set into teaching mode, with the robot in the chosen admittance mode. The buttons on the interface module wrist will also be changed from the default *map* to the teaching mode map.

4. Manipulate the robot by hand, and use the wrist buttons to take a snapshot of the robot position, or open/close the gripper fingers.
5. Repeat step 4 as needed to capture the different components of the desired movement by the robot and gripper.

© 2025 Kinova inc. All rights reserved.

6. Click the Teach button again to exit teaching mode.
7. Home the robot to return to a stable starting position, and then click play to play back the sequence.
8. If desired, you can fine-tune the sequence by using the sequence editor to insert and configure any needed delays in the sequence, or to add duration or speed constraints to sequence steps.

Importing and exporting actions or sequences

This section describes functionalities available on the **Actions** page for importing and exporting actions or sequences.

You can Export All defined actions or sequences as XML or JSON, to share with others. Similarly, a JSON or XML action file can be imported from the computer. The Export All Export All and Import Import functions are available at the top of the main panel.

Playing back actions and sequences

Actions and sequences can be played back from the **Actions** page, and controls are provided to manage playback.

When an action or sequence is selected by clicking on its card, the item is loaded in a playback bar at the bottom of the page.

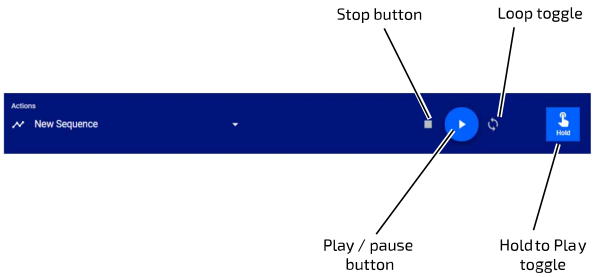

Figure 63: Actions playback bar

When the play button is pressed, the robot will move directly to execute the described action or sequence.

The **Hold to Play** toggle (by default, activated) controls the playback. When the toggled on, the playback will only continue as long as the play button is held down. When not toggled on, a single press of the play button will suffice for the playback to execute completely.

The **Play** button plays the sequence.

The **Pause** button (the Play button changes to a Pause button while the sequence is playing) will stop the playback while keeping the playhead at the same *position*. When the play button is pressed again, the motion will continue exactly where it left off.

© 2025 Kinova inc. All rights reserved.

The **Stop** button will stop the movement and return the playhead to the beginning.

In the case of a Cartesian *pose*, angular position, or gripper position, the robot (or gripper) will interpolate linearly between the present position and the target position and move smoothly and directly to the target position.

For a sequence, the robot will first go directly to the first item in the sequence, and then will trace out a *path* that goes through the positions on the sequence. A progress bar above the playback bar shows the progress of the playback through the steps.

For sequences, an additional **Loop toggle** control can be toggled on or off. When toggled on, a sequence will play through all the steps and then go directly to the pose of the first step. This is useful for demonstrations.

Protection Zones

The **Protection Zones** page of Kortex Web App allows users to define zones around the robot where movement is prevented or limited.

The **Protection Zones** page allows user to define and activate multiple three-dimensional geometric volumes around the robot where the robot:

- cannot go, and, optionally,
- the maximum speed is constrained

A protection zone is intended to limit the possibility of the robot running into either the user or objects near the robot.

Important: Protection zones only work when controlling the robot in *Cartesian mode*; when controlling the robot in *Angular mode*, they are ignored.

Zone Shapes

Three protection zone shapes are available:

- Rectangular prism
- Sphere
- Cylinder

© 2025 Kinova inc. All rights reserved.

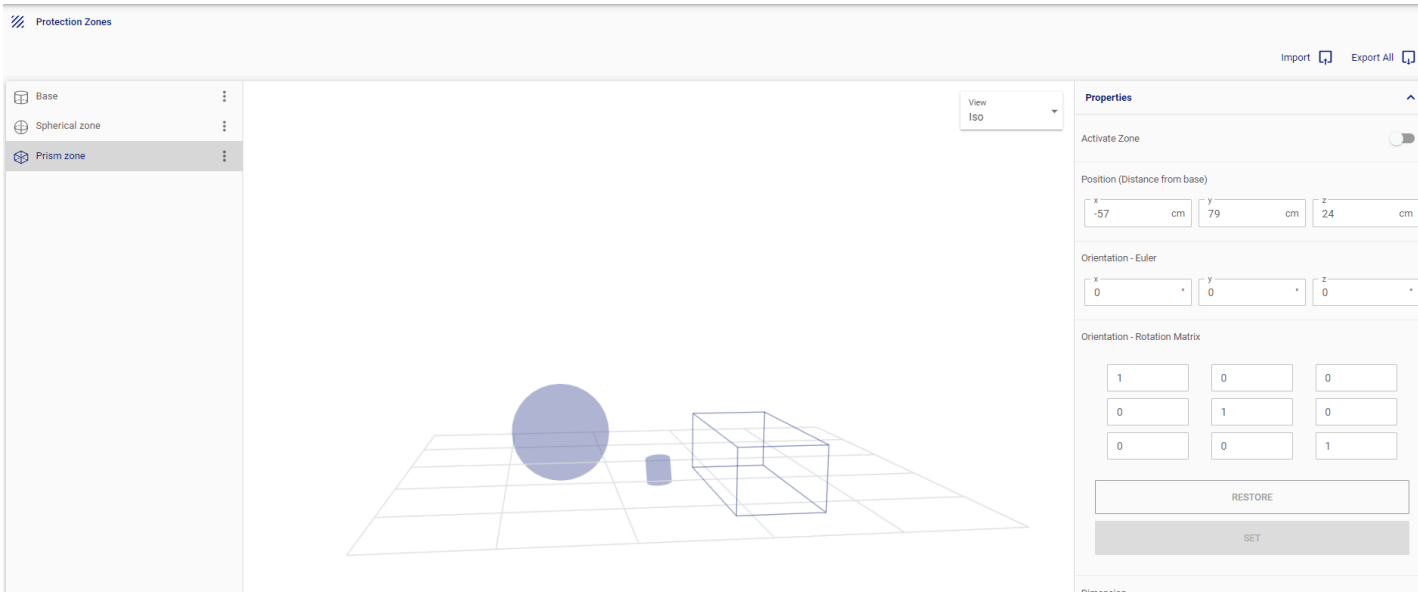

Figure 64: Protection Zones page

The **Protection Zones** page allows for defining, configuring, and viewing protection zones.

Multiple protection zones can be active at the same time.

Note: The robot control library applies protection zones in the course of executing any high-level motion commands. There are no hard limits to the number of simultaneous active protection zones, but for best performance, we recommend activating at most four protection zones at the same time.

The **Protection Zones** page is divided into three main sections:

- **Zones** panel
- **Views** panel
- **Zones** configuration panel

© 2025 Kinova inc. All rights reserved.

Figure 65: Zones panel

The zones panel is used to create new protection zones. It also lists the already defined zones and allows users to rename, duplicate, and delete existing protection zones. It also allows users to export individual protection zones as XML or JSON.

The panel lists the already defined protection zones. Clicking on a list entry selects that entry, highlighting the zone in the list and:

- highlighting the zone in the views panel
- brings up a configuration form for that zone in the zones configuration panel

A 'more' icon made up of three vertical dots on the right side of each list entry brings up a menu with the following options:

- Rename - enter a recognizable / meaningful name for the selected protection zone
- Duplicate - create a new zone that is a duplicate copy of the selected existing zone
- Delete - delete the selected zone
- Export XML - export the present saved configuration of the zone as XML
- Export JSON - export the present saved configuration of the zone as JSON

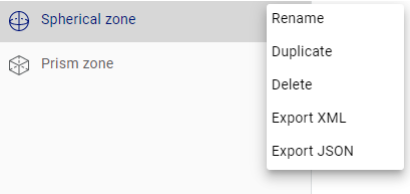

A new protection can be added by clicking the + sign icon at the bottom of the zone panel and selecting from the list of protection zone types.

© 2025 Kinova inc. All rights reserved.

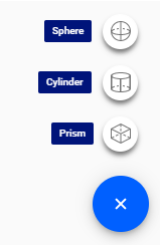

This will create a new, empty protection zone for the selected type, and add an entry to the zone panel list.

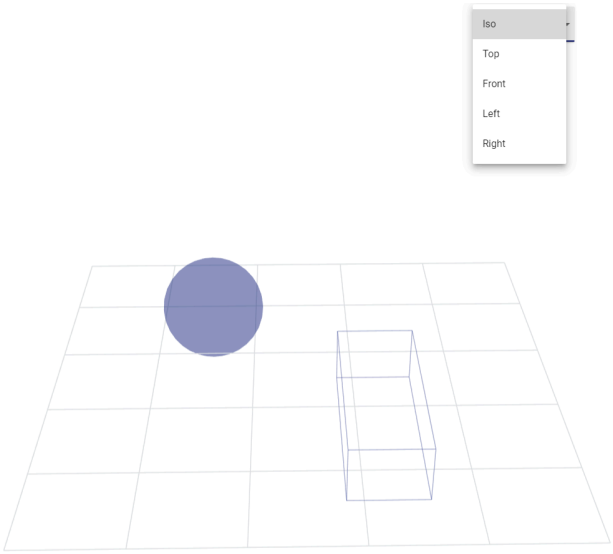

Figure 66: Views panel

The views panel offers a live visualization of the defined protection zones. The visualization can display the zones in several different views:

- Iso (isometric) view
- Top view
- Front view
- Left view
- Right view

For the isometric view, you can drag on the screen to change the view angle. The other options allow a view from a fixed perspective.

© 2025 Kinova inc. All rights reserved.

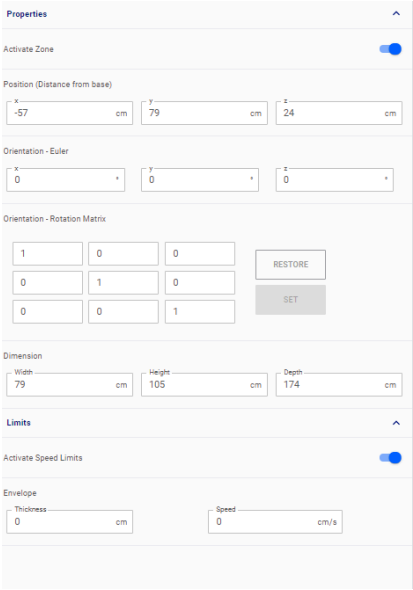

Figure 67: Zones configuration panel

The zones configuration panel allows you to configure the presently selected protection zone. The panel is divided in two sections:

- Properties
- Limits

The **properties** section is for defining the area where the defined checkpoints on the robot cannot go. This allows you to:

- Activate/deactivate a zone
- Set the *position* of the center of the zone in terms of the *base frame*
- Set the *orientation* of the protection zone, either as a set of three *Euler angles* or as a rotation matrix

  Note: Orientation is defined as rotations around a frame aligned with the base frame and centered on the center of the protection zone

  Note: Orientation can be set for prism and cylinder shapes only (spherical region symmetric to rotations around its own center)
- Dimensions of the zone

The configurable dimensions of the zones are:

- Prism shape - height, width, and depth
- Cylinder shape - height and radius
- Sphere shape - radius

© 2025 Kinova inc. All rights reserved.

The **limits** section defines an envelope around the 'no-go' zone where the speed of the robot is constrained. An envelope is a three dimensional region bounded by the outer boundary of the no-go zone and a larger zone that is the same shape, but extending out a certain thickness beyond the no-go zone. The limits section allows you to:

- Activate/deactivate limits
- Define an envelope thickness (in cm, between 0 and 200 cm)
- Define an envelop speed limit (in cm/s, between 0 and 10 cm/s)

Camera

The **Camera** page of the Kortex Web App allows users to view the live feed from the vision module color sensor.

The **Camera** page allows you to see the live feed from the color sensor of the installed vision module.

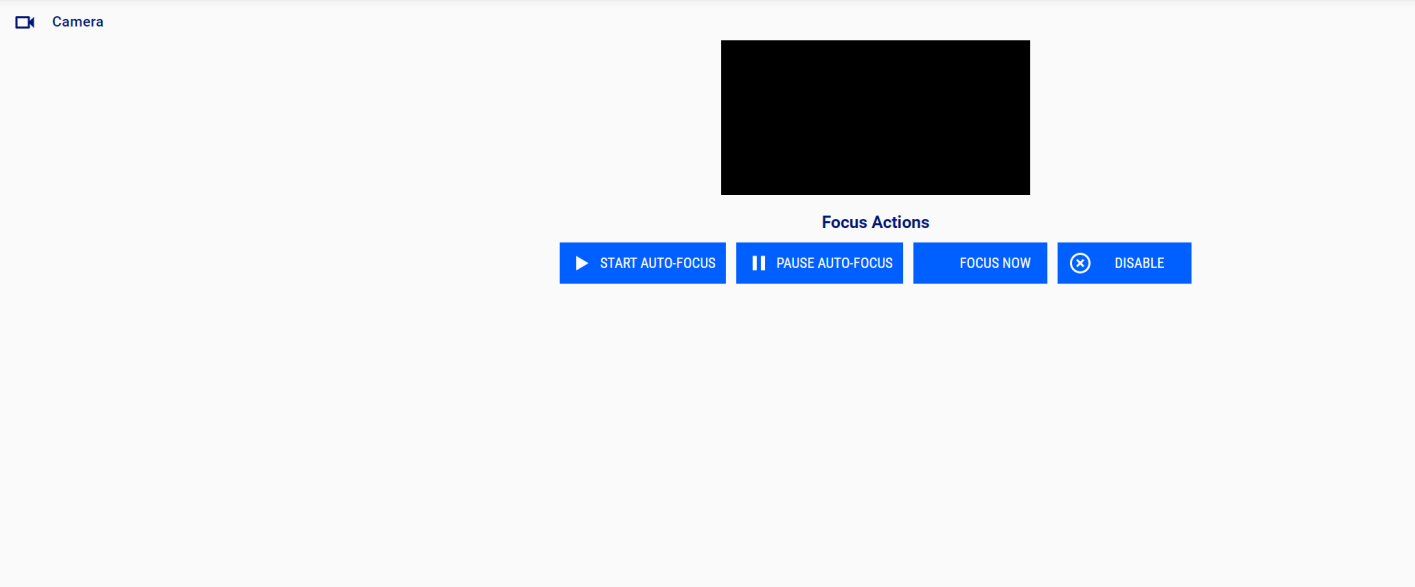

Figure 68: Camera page

There are four controls available on this page:

- START AUTO-FOCUS Start auto-focus
- PAUSE AUTO-FOCUS Pause auto-focus
- FOCUS NOW Focus now
- DISABLE Disable auto-focus

© 2025 Kinova inc. All rights reserved.

Systems page group

The Systems page group of the Kortex Web App groups together pages to update and view status and configuration information for the system.

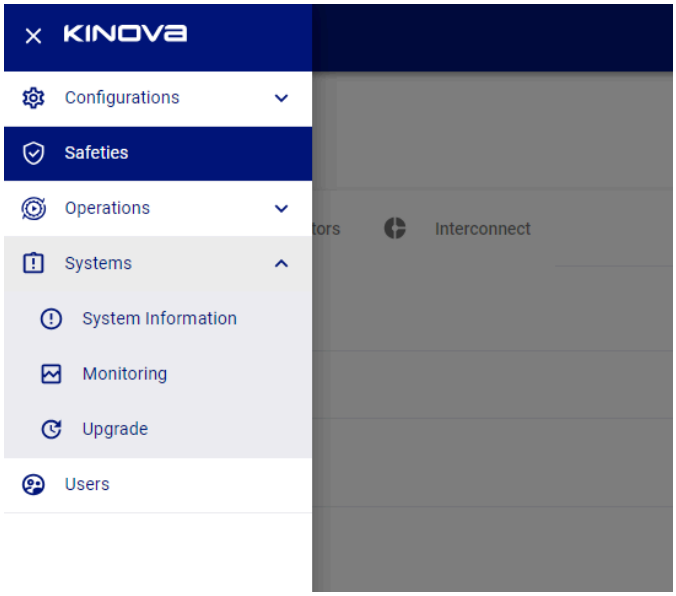

Figure 69: Systems page group

The Systems page group contains pages for robot devices information, monitoring, and software/firmware upgrades.

It contains the following pages:

- System Information
- Monitoring
- Upgrade

System Information

The **System Information** page of the Kortex Web App provides high-level hardware and firmware details for the robot.

The **System Information** page gives a quick high level view of hardware and firmware configuration details.

© 2025 Kinova inc. All rights reserved.

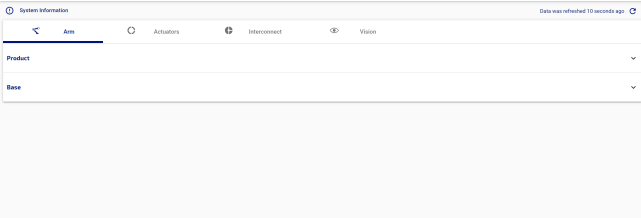

Figure 70: System Information page

The information on the page is displayed within different tabs:

- Arm (product and base)
- Actuators (for each of the individual actuators in robot)
- Interconnect (interface module)
- Vision

For the base, actuators, interface module, vision module, information is given on:

- bootloader version
- device type
- firmware version
- MAC address
- part number, part number revision, and serial number

Product gives product-level information:

- KIN (Kinova information number)
- model ID
- model year
- assembly plant
- degrees of freedom
- base type
- end effector type
- vision module type
- interface module type
- arm laterality
- wrist type

© 2025 Kinova inc. All rights reserved.

Monitoring

The **Monitoring** page of the Kortex Web App allows users to view real-time monitoring information on the status and performance of the robot.

The **Monitoring** page allows for real-time monitoring of status and performance information for the robot. The **Monitoring** page is the first page that opens when opening a new session using the Kortex Web App.

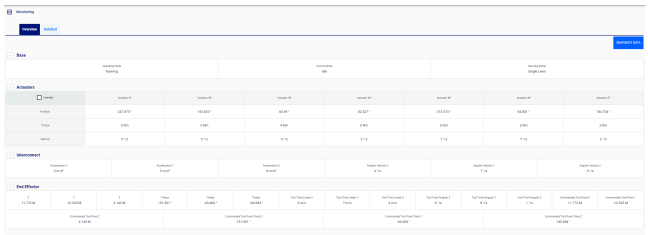

Figure 71: Monitoring page

The monitoring information is divided into sections:

- Base
- Actuators
- Interconnect (interface module)
- End effector

There are two tabbed views available, selectable through three tabs at the top of the screen:

- Overview
- Detailed

Overview tab contents

The Overview tab shows the following information in each section:

- Base
  - operating mode (maintenance, update, shutting down, run, in fault)
  - control mode (angular joystick, Cartesian joystick, torque control, Cartesian admittance, joint admittance, null space admittance)
  - *servoing* mode (single level (high level), low level)
- Actuators - for each *joint*:
  - measured position (°)
  - measured torque (N·m)
  - measured velocity (°/s)
- Interconnect (interface module)

© 2025 Kinova inc. All rights reserved.

  - acceleration - x, y, and z (m/s^2)
  - angular velocity x, y, and z of interconnect (°/s)
- End effector
  - position and orientation - x, y, z, θ_x, θ_y, θ_z
  - velocity - x, y, z, θ_x, θ_y, θ_z
  - tool Twist - x, y, z, θ_x, θ_y, θ_z
  - External tool wrench force - x, y, z
  - External tool wrench torque - x, y, z
  - Commanded tool pose - x, y, z, θ_x, θ_y, θ_z

Detailed tab contents

The detailed tab shows the following information in each section:

- Base
  - operating mode (maintenance, update, shutting down, run, in fault)
  - control mode (angular joystick, Cartesian joystick, torque control, Cartesian admittance, joint admittance, null space admittance)
  - servoing mode (single level (high level), low level, bypass)
  - arm voltage (V)
  - arm current (A)
  - CPU temperature (°C)
  - ambient temperature (°C)
  - acceleration x, y, z of the base (m/s^2)
  - angular velocity x, y, z of base (°/s)
- Actuators - for each joint:
  - measured position (°)
  - measured velocity (°/s)
  - measured torque (N·m)
  - motor current (A)
  - voltage (V)
  - motor temperature (°C)
  - core temperature (°C)
- Interconnect
  - acceleration x, y, z of interface (m/s^2)

© 2025 Kinova inc. All rights reserved.

  - angular velocity x, y, z of interface (°/s)
  - voltage (V)
  - core temperature (°C)
- End effector
  - position and orientation - x, y, z, θ_x, θ_y, θ_z
  - tool Twist - x, y, z, ω_x, ω_y, $\#_z$
  - External tool wrench force - x, y, z
  - External tool wrench torque - x, y, z
  - Commanded tool pose - x, y, z, θ_x, θ_y, θ_z

Exporting a snapshot of monitoring data

It is possible to export a *snapshot* of the currenting monitoring data for the robot.

By pressing the snapshot data button (SNAPSHOT DATA), you have the ability to save a dump of the monitoring data locally on your computer to JSON format. This can be useful information to share with Kinova support for troubleshooting purposes.

Upgrade

The **Upgrade** page of the Kortex Web App is used to update the software of the robot with a downloaded software package.

The **Upgrade** page provides a simple interface to perform upgrades to the robot.

Robot upgrade files are bundled as a package (.swu file).

The robot *upgrade package* includes:

- robot devices firmware updates:
  - base controller
  - actuators
  - interface module
  - vision module
- Kortex Web App upgrade package
- Kinova® Kortex™ *API* upgrade package

© 2025 Kinova inc. All rights reserved.

Figure 72: Upgrade page

The **Upgrade** page provides an interface to upload a new upgrade package and initiate the upgrade.

The page also provides information on the current Kortex Web App and Kinova® Kortex™ API versions, as well as the current firmware versions of the robot devices.

© 2025 Kinova inc. All rights reserved.

Upgrading the robot firmware and software

This section describes how to upgrade the robot firmware and software using the Kortex Web App.

Before you begin

- A new robot update package needs to have been previously downloaded to the development computer.
- The development computer needs to be connected to the robot, either via wired Ethernet connection or via Wi-Fi.
- The user needs to have a Kortex Web App session open on the robot.

About this task

The Kortex Web App is used to upgrade the robot firmware and software using a new *upgrade package* on the development computer. The upgrade package covers all devices in the arm, and all devices are upgraded as part of this process.

Important: If Wi-Fi is enabled before starting the upgrade process, Wi-Fi stays enabled after the upgrade is completed. If Wi-Fi is disabled before the upgrade process, Wi-Fi stays disabled after the upgrade is completed.

Important: If Bluetooth is enabled before starting the upgrade process, Bluetooth stays enabled after the upgrade is completed. If Bluetooth is disabled before the upgrade process, Bluetooth stays disabled after the upgrade is completed.

Procedure

1. Browse to the Kortex Web App Upgrade page.
2. Click the Upload button on "Upload New Software."
3. Browse the development *PC* disk to select the new firmware package. The new package will upload to the robot. If the upload is unsuccessful, you will receive an error message. If it is successful, the process will continue.
4. Once the firmware package uploads successfully, you will be able to start the upgrade. The Kortex Web App will refresh twice during the upgrade, and each time you will have to login again. If you login during the upgrade, the Upgrade page will indicate that the upgrade is in progress.

Results

The *LED* on the *base* of the robot is green when the process is over. The Kortex Web App also indicates when the process is finished.

© 2025 Kinova inc. All rights reserved.

Users

This section describes the **Users** page of the Kortex Web App allows for editing user profile information.

The **Users** page is used to define, set, and edit user profiles for the robot.

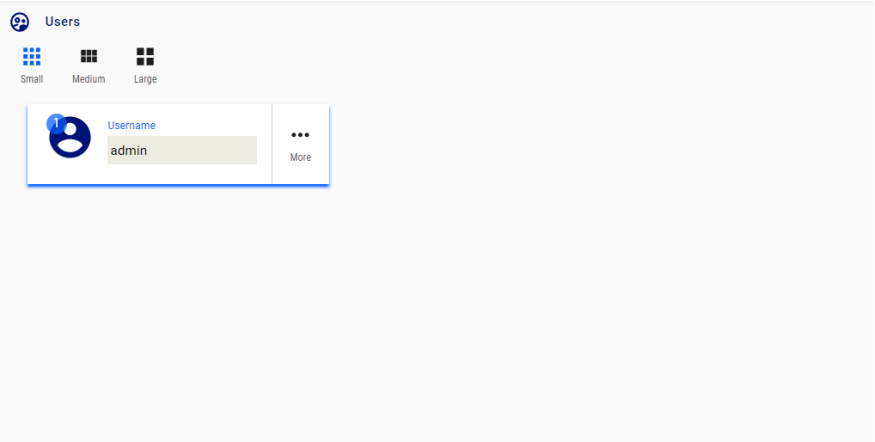

Figure 73: Users page

Defined profiles are displayed as information cards on the main information panel of the page. The cards are in three different sizes:

- large
- medium
- small

Card sizes can be toggled using buttons on the upper right of the main information panel.

Large cards show a full set of information. The large card displays the user name and language.

Medium cards are slightly smaller.

Small cards show a more compact view. By clicking the More button, a pop-up menu is revealed to allow you to View, Edit, Delete, or Duplicate the profile.

Clicking Edit brings you to an editing interface where it is possible to configure the profile.

© 2025 Kinova inc. All rights reserved.

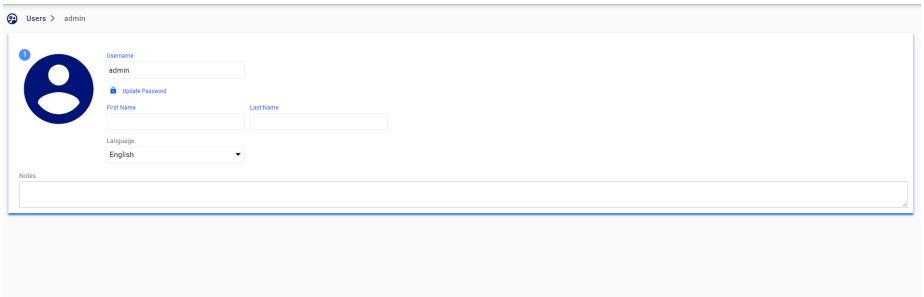

Figure 74: Card editing interface

Click on the button in the lower right corner of the page to create a new user. This launches a menu to add information for the new user.

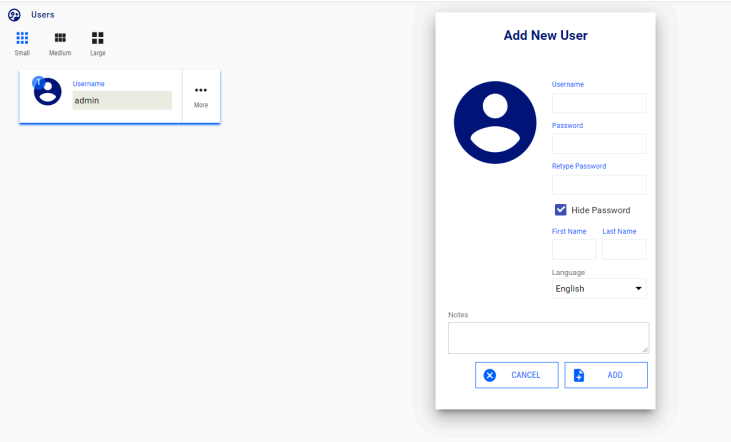

Figure 75: Create new user

© 2025 Kinova inc. All rights reserved.

Creating a new user profile

This section describes how to create a new user profile in the Kortex Web App.

Procedure

1. On the **Users** page, press the button to add a new empty *user profile*. This will bring up a window to enter information for the profile.

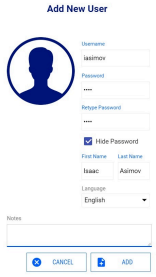

2. Enter the information for the user profile including name, user name, and password.
3. When you are done adding information, press ADD to create the new user profile.

Results

The new user profile will be created. The next time you log on to the Kortex Web App, you will be able to log in with these credentials.

© 2025 Kinova inc. All rights reserved.

Kinova® Kortex™ Developer guide

Introduction

This section of the documentation provides guidance on developing custom software applications for the robot.

Your robot is enabled by Kinova® Kortex™, the Kinova software framework and application development platform. This growing and evolving framework will allow you to configure and control the robot programmatically, adapting to your specific needs and supporting you in integrating new Kinova products into robotics applications. The Kinova® Kortex™ *API* supports multiple robot products from Kinova as a cross-hardware development framework.

Note: Some of the specific features of the API are hardware dependent and may not be available on your robot.

APIs are currently provided for the following languages:

- C++
- Python
- MATLAB® (simplified API supporting a subset of Kortex functionality)

Kinova also offers *Robot Operating System (ROS)* packages covering most of the same functionalities.

The pages that follow describe the general philosophy and approach of the APIs.

The following GitHub repositories contain additional developer guidance and resources, including detailed API documentation, setup instructions, and source code examples:

- Kinova® Kortex™ API: kinovarobotics/kortex
- Kinova® Kortex™ ROS: kinovarobotics/ros_kortex
- Kinova® Kortex™ ROS Vision: kinovarobotics/ros_kortex_vision
- Kinova® Kortex™ MATLAB® API: kinovarobotics/matlab_kortex

Tutorial videos are available on the Kinova® YouTube channel (https://www.youtube.com/watch?v=zQewb08M4sA).

© 2025 Kinova inc. All rights reserved.

Devices and services

This section describes the concept of devices and services in the robot.

The *API* consists of **services** which define interfaces implemented and available on the various robot **devices**.

The robot consists of several devices:

- *base* controller
- actuators (each actuator is a distinct device)
- interface module
- vision module

A service consists of methods and communication exchange data structures. The devices in the robot each implement a particular set of services, some of which are available across multiple devices. The methods available as part of a service on a device are accessed via *remote procedure call (RPC)*.

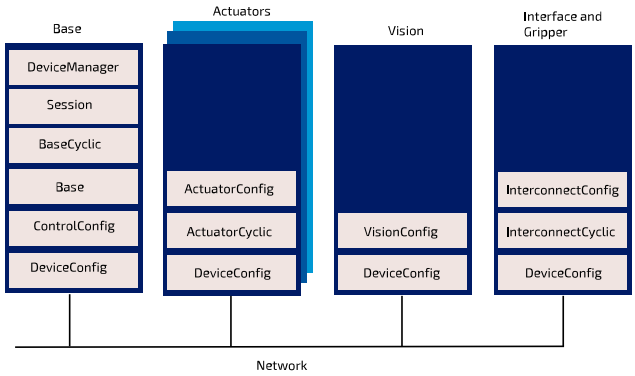

Figure 76: Services on multiple devices

Available services

This section lists the available robot services for the robot.

Kinova makes available a number of services for developers, each of which includes functions and data types supported for C++ and Python.

© 2025 Kinova inc. All rights reserved.

- `Session` - provides functions for opening and closing sessions with the robot. This service is used at the beginning and end of every session with the robot to authenticate the user.

  Note: In practice, end users will not use the Session service directly, but will use a SessionManager object. See the GitHub documentation for more details.
- `Base` - broadly useful service. Provides functions for configuring a range of base-related functionalities as well as high-level control for the robot.
- `DeviceManager` - provides a list of device information used for internal communication routing purposes.
- Cyclic data communications (sending commands to devices and/or receiving status feedback on a periodic or as-requested basis). Cyclic data communications are used with low-level *servoing*, and are intended to be called by *API* clients as part of a user-defined 1 kHz control loop via a `UDPTransportClient` on port 10001.
  - For low-level servoing cyclic communication
    - `BaseCyclic`- sending commands to actuators and gripper motors and obtain feedback from base, actuators, wrist interface, and gripper motors.
- Configuration related
  - `ControlConfig` - get / set control library configuration
  - `ActuatorConfig` - get / set actuator configuration
  - `DeviceConfig` - get / set general device configuration
  - `InterconnectConfig` - get / set interface expansion configuration
  - `VisionConfig` - get / set Vision module configuration (for robots with integrated Vision module)

For full details on available services, see the Kinova® Kortex™ GitHub repository.

Services, methods, and messages

This section describes the concept of messages used by functions within services.

The *API* services offer a set of *RPC* and pub/sub methods. The methods exchange data which are structured as Google Protocol Buffer message objects.

© 2025 Kinova inc. All rights reserved.

Kinova® Kortex™ API and Google Protocol Buffer

Describes the use of Google Protocol Buffer for the Kinova® Kortex™ API.

On Google Protocol Buffer

The Kinova® Kortex™ *API* is based on the Google Protocol Buffer 3 mechanism for serializing structured data. Using Protocol Buffer, the API is made available in C++ and Python languages.

Developers accustomed to Protocol Buffer can see `.proto` files on the Kinova® Kortex™ GitHub repository. These files are published as a means to document the services and methods offered via the API.

The API data structures are based on Google Protocol Buffer messages. Extensive documentation has been made available by Google explaining the different mechanisms offered to:

- set a field in a message
- read a OneOf element in a message
- go through a nested object
- set a nested object
- get/set a collection

For more details on how the above works, check out the following documentation on the Google Protocol Buffer website:

- C++ tutorial: https://developers.google.com/protocol-buffers/docs/reference/cpp-generated
- Python tutorial: https://developers.google.com/protocol-buffers/docs/reference/python-generated

Service client-server model

This section describes the client-server model for services.

Services operate on a **client-server** model. The **server** component of the service runs on the device itself. The **client** component runs on the client computer.

Services offer a set of device functionalities which are transparently exposed to the end-user via *RPC* and pub/sub methods.

The *API* is built on a transparent client/server communication protocol which allows an end-user (client side) to call methods on robot devices.

© 2025 Kinova inc. All rights reserved.

Blocking and non-blocking calls

Remote procedure calls on the robot are generally available in both blocking and non-blocking forms. Non-blocking calls are available using Future/Promise and by registering callback functions.

The *API* defines interfaces of methods to be executed on devices in the robot.

The methods can be one of two types, depending on what the client application does while waiting for the response:

- *blocking*
- *non-blocking*

With a blocking call, the flow of the client application will pause and wait for the remote procedure call to return a response before proceeding. With *non-blocking* call, the procedure call is sent, and the flow of the application carries on while waiting for the response. When the response arrives, the caller will handle the response.

For the Python API, only blocking calls are enabled.

In the context of C++, remote procedure calls in the API can in general be set as either *blocking* or *non-blocking*.

There are two types of non-blocking calls available in the C++ API:

- Future/Promise
- Registered callback functions

For more information on how this works, see the API documentation on the Kinova® Kortex™ GitHub repository.

Users, connections and sessions

Describes the concept of connections and sessions in the API.

Introduction

A user has a **connection** with the robot when communication is established between the client application and the robot.

A **session** is active when the user has used the connection to log in to the robot with credentials. The default session credentials for the robot are:

- user: `admin`

© 2025 Kinova inc. All rights reserved.

- password: `admin`

A session is opened using a `SessionManager` object.

Sessions and robot control

Multiple users can connect to the same robot simultaneously, and have multiple sessions open on the robot.

A session must be created before commands can be received by the *base* (otherwise they will be discarded). Sessions are only supported for communications routed through the base. Sessions are **not** supported for communications between a client computer and a device (that is, low-level bypass *servoing*).

Currently, high-level servoing for the robot only work in single-level servoing mode. Multi-level servoing is not currently supported. What this means is that multiple sessions can be active on the robot, and multiple users can pull data from the robot. However, only one session can actively control the robot at any given time. Rules are in place on the robot base to manage which session has control of the robot at any given time.

Device routing and transport

This section describes the concept of device routing and low-level transport.

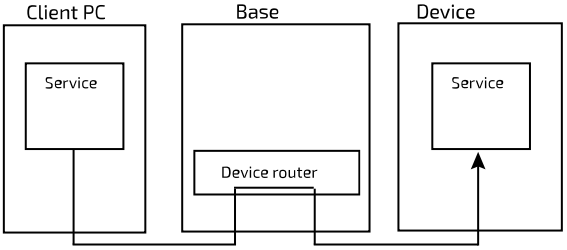

Figure 77: Device routing

The *API* allows you to communicate with the robot devices. Using a device identifier the RPCs and pub/sub methods of the API are routed by the robot *base* and directly bridged to the intended device.

The routing from the client computer, through the base to a device is managed by a `RouterClient` object in the API. A Session on the robot depends on a `RouterClient` object.

RouterClient objects depend, for low-level details of the transport of the routed methods, on `Transport` objects. A `Transport` object uses a specific underlying network transport protocol. The API defines two types of Transport objects, one using *TCP* as the protocol, and another using *UDP*.

© 2025 Kinova inc. All rights reserved.

TCP `Transport` objects are used for high-level robot control and configuration.

UDP `Transport` object are used for low-level (real-time) cyclic communication with the robot.

Note: Since Sessions require a `RouterClient`, and a `RouterClient` is tied to a `Transport` object using a specific protocol, separate Sessions must be created if high-level control / configuration and low-level control are used in the same application.

For more details, see the API documentation on GitHub.

Robot servoing modes

This section describes the concept of servoing modes on the robot.

There are multiple *servoing* modes on the robot. A servoing mode is a modality through which commands are transmitted to robot devices during operation. Depending on the servoing mode chosen, the details involved in controlling via the *API* will be different.

There are two servoing modes:

- `High-level`
- `Low-level`

High-level servoing

This section describes the concept of high-level servoing with the robot.

High-level *servoing* is the default servoing mode for the robot on bootup.

In high-level servoing, users connect to the *base* through the 2024 *API* (whether directly, or through the Kortex Web App built on top of the API), sending command inputs. The base routes commands to the actuators, and manages a 1 kHz control loop.

High-level servoing is the recommended servoing mode for non-advanced users.

High-level servoing allows a client to control the robot by sending it a target (angular or Cartesian) *position* or velocity via an API method which is sent once (that is, no high frequency client-controlled communication between the client *PC*PC and the robot). High level API calls are redirected to the robot control library to calculate inverse kinematics (breaking down the command into commands for actuators) and apply limits (*protection zone*s, singularity management, self-collision avoidance).

The base then manages the execution of the command via the 1 kHz communications with the actuators.

© 2025 Kinova inc. All rights reserved.

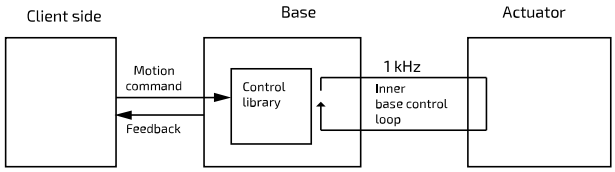

Figure 78: High-level servoing

High-level servoing is the default servoing mode for the robot on bootup. In high-level servoing, users connect to the base through the API (whether directly, or through the Web App built on top of the API), sending command inputs. The base routes commands to the actuators, and manages a 1 kHz control loop.

High-level servoing is the recommended servoing mode for non-advanced users. High-level servoing allows a client to control the robot by sending it a target (angular or Cartesian) position or velocity via an API method which is sent once (that is, no high frequency client-controlled communication between the client PC and the robot).

High level API calls are redirected to the robot control library to calculate inverse kinematics (breaking down the command into commands for actuators) and apply limits (protection zones, singularity management, self-collision avoidance).

The base then manages the execution of the command via the 1 kHz communications with the actuators.

Low-level servoing offer lighter and faster API methods, but at the cost of having to manage these details yourself.

Sessions and control permissions

As soon as someone takes control of the robot by sending a control command (whether from API calls, Kortex Web App session, or Xbox gamepad input) to the robot, the control mode changes from IDLE to SERVOING. In this mode, control commands from other sessions sent via the Kortex Web App or API methods will be blocked while the control mode is in SERVOING and this session has control. However, after a predefined "grace period" of 7.5 seconds elapses with no new control commands from the user, the robot control mode returns to IDLE and someone else can take control by sending control inputs via the Kortex Web App or API calls.

Override by physical controls

Physical controls of the robot via a connected Xbox gamepad or the buttons on the robot wrist override user session control of the robot via Kortex Web App or API calls. These physical controls always take precedence immediately, without having to wait for the grace period to elapse.

© 2025 Kinova inc. All rights reserved.

Low-level servoing

This section describes the concept of low-level servoing with the robot.

In low-level *servoing*, the API client connects to the *base* and sends commands through the base for routing.

The base ensures device routing and internal communications with the actuators at 1 kHz, but the high-level functionalities for the base control loop (robot kinematics, *trajectory* management, and so on.) are no longer available.

Low-level servoing allows clients to control each actuator individually by sending command increments at 1 kHz frequency (bypassing the kinematic control library).

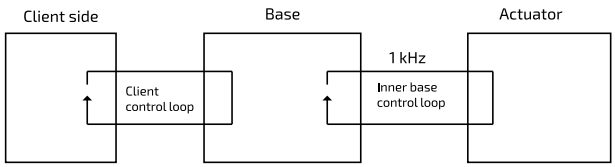

Figure 79: Low-level servoing

Low-level bypass servoing

This section describes the concept of low-level bypass servoing for the robot.

In this mode, the client PC*PC* uses *UDP* communication directly with the different actuators - there is no device routing involved. The client *path* is able to communicate directly with the actuators using their *IP* addresses. Since the control here bypasses the *base* completely, the client is fully responsible for managing the control loop.

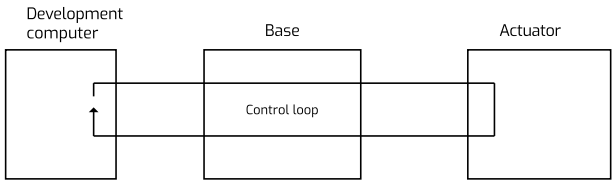

Figure 80: Low-level bypass servoing

Low-level *servoing* offer lighter and faster API methods, but at the cost of having to manage these details yourself.

Notifications

This section describes the concept of notifications in the API.

The robot *base* can provide *notifications* on different topics as requested by a client application that has a session open with the robot.

© 2025 Kinova inc. All rights reserved.

The robot base uses a Publish/Subscribe design pattern. That is, rather than needing to poll periodically for updates, the client application subscribes to a list of *Topics*. Whenever a change happens related to that topic, whether caused by the same client session, or another, a publisher sends a notification to all subscribers. Notifications are surfaced to clients via the API, and are also displayed in the **Notifications** page of Kortex Web App.

Client applications can also unsubscribe from a topic.

Methods for subscribing and unsubscribing from notification topics are described in the API documentation on the Kinova® Kortex™ GitHub repository.

Error management

This section describes the concept of error management with the robot.

When an *API* method is called, sometimes an error will result.

There are three main categories of errors:

- Protocol server errors
- Protocol client errors
- Device errors

The first two categories of errors include all errors relating to the internal communication protocol. (ex: invalid, unsupported or unknown calls, out of session call, and so on.)

The other category is for errors coming from the target device.

For each high level category, there are also more detailed and specific errors.

For more information about the error codes that can be produced, see the Kinova® Kortex™ GitHub documentation.

Error codes

This section describes the meaning of error codes used by the API.

Overview

Some *API* calls will result in errors. When an error occurs, an exception is thrown which includes information about the type of error.

The error information includes at minimum an Error Code and a Sub-Error code.

The error code identifies the general type of error, while the sub-error code provides more detailed information.

© 2025 Kinova inc. All rights reserved.

The following reference tables provide guidance in interpreting error codes.

Error codes description

Name	Description
SUCCESS	No errors
ERROR_PROTOCOL_SERVER	Protocol buffer server error
ERROR_PROTOCOL_CLIENT	Protocol buffer client error
ERROR_DEVICE	Device error

Sub-Error codes description

Table 79: General (used when there are no more specific error codes available)

Name	Description	Why is error reported?
SUB_SUCCESS	No errors	Sub-error code is set to sub-success when error code is set to success
FAILED	Failure	Used to report an error for which there is no more specific sub-error code
UNIMPLEMENTED	Unimplemented method	Reports back that the remote procedure call is not implemented on the robot, though it is available through the service
INVALID_PARAM	Invalid parameter	The remote procedure call is supported, but parameter is considered invalid by the robot (that is, outside admissible range)

Table 80: Protocol Server (reported by the protocol server)

Name	Description	Where is error reported?
UNSUPPORTED_SERVICE	Service not recognized by protocol server	Rx side

© 2025 Kinova inc. All rights reserved.

Name	Description	Where is error reported?
UNSUPPORTED_METHOD	Function not recognized by protocol server	Rx side
TOO_LARGE_ENCODED_FRAME_BUFFER	Encoded frame larger than what transport permits	Tx side
TOO_LARGE_ENCODED_PAYLOAD_BUFFER	Encoded payload is larger than what transport permits	
FRAME_ENCODING_ERR	Unable to encode frame	Tx side
FRAME_DECODING_ERR	Unable to decode frame	Rx side
INCOMPATIBLE_HEADER_VERSION	Frame header version differs from what is expected by protocol server	Rx side
UNSUPPORTED_FRAME_TYPE	Frame type not recognized by protocol server	Rx side
UNREGISTERED_NOTIFICATION_RECEIVED	Protocol server receiving unregistered *notification*	
PAYLOAD_DECODING_ERR	Unable to decode payload	
INVALID_SESSION	Session not recognized by protocol server	Rx side
INVALID_DEVICE	Device ID when bridging is not found or already in use.	

Table 81: Protocol Client (reported by the protocol client)

Name	Description	Where is error reported?
TOO_LARGE_ENCODED_FRAME_BUFFER	Encoded frame larger than what transport permits	Tx side
TOO_LARGE_ENCODED_PAYLOAD_BUFFER	Encoded payload is larger than what transport permits	
FRAME_ENCODING_ERR	Unable to encode frame	Tx side
FRAME_DECODING_ERR	Unable to decode frame	Rx side
INCOMPATIBLE_HEADER_VERSION	Frame header version differs from what is expected by protocol client	Rx side

© 2025 Kinova inc. All rights reserved.

Name	Description	Where is error reported?
UNSUPPORTED_FRAME_TYPE	Received frame type is not recognized by the protocol client (or unexpected, unknown, or unsupported)	Rx side
UNREGISTERED_NOTIFICATION_RECEIVED	Protocol client received notification for which it does not have a registered notification to call back	
PAYLOAD_DECODING_ERR	Unable to decode payload	
UNREGISTERED_FRAME_RECEIVED	Client received a response that it was not expecting (that is, for which it did not send a remote procedure call)	

Robot - the following are sub-error codes that can be reported by the robot

Table 82: Session / users

Name	Description	When is error reported?
INVALID_PASSWORD	Password does not match specified user	`createSession()`, `changePassword()` function calls
USER_NOT_FOUND	Unrecognized user	`createSession()` function call

Table 83: Configuration

Name	Description	When is error reported?
ENTITY_NOT_FOUND	Operation failed because could not retrieve entity	`readX()`, `updateX()`, and `deleteX()` function calls

Table 84: Control / sequence

Name	Description	When is error reported?
ROBOT_MOVEMENT_IN_PROGRESS	When robot refuses the new control command because robot movement is in progress	`executeAction()`, `playX()`, `sendTwistX()`, `sendWrenchX()` function calls

© 2025 Kinova inc. All rights reserved.

Name	Description	When is error reported?
ROBOT_NOT_MOVING	When attempting to stop a robot movement when it is not yet moving	stopAction(), stop(), pause(), pauseAction() function calls

Table 85: Configuration backup

Name	Description	When is error reported?
NO_MORE_STORAGE_SPACE	Unable to execute action because no storage left	createConfigurationBackup() function call

Table 86: Operating mode

Name	Description
ROBOT_NOT_READY	When sending a command while the robot initialization is not complete
ROBOT_IN_FAULT	When sending a command while the robot is in a fault
ROBOT_IN_MAINTENANCE	When sending a command while the robot is in maintenance
ROBOT_IN_UPDATE_MODE	When sending a command while the robot is in update
ROBOT_IN_EMERGENCY_STOP	When the robot was manually put into an emergency stop

Table 87: Servoing

Name	Description
SINGLE_LEVEL_SERVOING	A second client is attempting to control the robot while it is in single-level *servoing* mode
LOW_LEVEL_SERVOING	Attempting to send high-level control to the robot while it is in low-level servoing mode

Table 88: Mapping

Name	Description
MAPPING_GROUP_NON_ROBOT	Trying to add non-root MapGroup to Mapping

© 2025 Kinova inc. All rights reserved.

Name	Description
MAPPING_INVALID_GROUP	Trying to add invalid or non-existent MapGroup to Mapping
MAPPING_INVALID_MAP	Trying to add invalid or non-existent Map to Mapping
MAP_GROUP_INVALID_MAP	Trying to add invalid or non-existent Map to MapGroup
MAP_GROUP_INVALID_PARENT	Trying to add MapGroup under invalid parent
MAP_GROUP_INVALID_CHILD	Trying to add invalid or non-existent child to MapGroup
MAP_GROUP_INVALID_MOVE	Trying to change MapGroup's parent: move not supported
MAP_IN_USE	Deleting a Map used in Mapping or MapGroup

Table 89: Network

Name	Description
WIFI_CONNECT_ERROR	Unable to connect to Wi-Fi network
UNSUPPORTED_NETWORK_TYPE	Unsupported network type

Kinova® Kortex™ GitHub repository

For more detailed information about developing applications using the API, visit the Kinova® Kortex™ GitHub repository at https://github.com/Kinovarobotics/Kinova-kortex2_Gen3_G3L3.

The repository offers access to a number of resources for developers.

- Setup instructions and release notes
- Detailed *API* documentation in Python
- Code examples

© 2025 Kinova inc. All rights reserved.

Kinova® Kortex™ ROS packages and GitHub repository overview

This section describes the contents of the *ROS* packages for the robot (and all other products enabled by Kinova® Kortex™).

Introduction

Kinova® Kortex™ *ROS* is the official repository containing ROS packages to interact with Kortex and related products. It consists of a number of ROS packages built on top of the client Kortex *API*.

These ROS packages are designed to work with ROS Melodic Morenia and ROS Noetic Ninjemys.

ROS Melodic is compatible with Ubuntu 18.04 (Bionic)

Methods provided by the underlying API are offered as ROS services and *topics*, depending on the method.

- *RPC* methods are exposed via ROS services
- pub/sub methods are exposed via ROS topics

The ROS Messages correspond to the message type definitions of the underlying API.

The ROS interface can be accessed using either Python (rospy) or C++ (roscpp).

Support is included for Gazebo and MoveIt.

Detailed documentation of the packages is available on the Kinova `ros_kortex` GitHub repository at github.com/kinovarobotics/ros_kortex

The repository includes various packages related to ROS development:

- setup instruction and release notes
- `kortex_api` (package containing header files and libraries needed to use the C++ Kinova Kortex API)
- `kortex_control` (package contains configuration files for the ros_control controllers used to control the simulated robot
- `kortex_description` (package contains URDF and STL files of the robot)
- `kortex_driver` (ROS node package to allow direct communication with the robot *base*)
- `kortex_examples` (examples needed to understand the basics of ros_kortex)
- `kortex_gazebo` (package contains files to simulate the robot)

© 2025 Kinova inc. All rights reserved.

- `kortex_moveit_config` (contains all the auto-generated MoveIt! configuration ROS packages)

Important: Low-level control is not available through ROS because ROS is not capable of handling the required 1 kHz communication rate.

Kinova® Kortex™ MATLAB® API and GitHub repository overview

Describes the contents of the Kinova® Kortex™ MATLAB API and GitHub repository.

The Kinova® Kortex™ MATLAB® *API* provides a wrapper giving access, via MATLAB® and Simulink® to a subset of the Kinova Kortex API functionality.

The package also includes integration of the vision module with the MATLAB® Image Acquisition Toolbox™.

This package has been tested on Ubuntu 16.04 (64-bit) and Windows 10.

More detailed information is available on the `matlab_kortex` GitHub repository at github.com/kinovarobotics/matlab_kortex.

Working with camera streams using GStreamer

The vision module camera streams can be processed programmatically using the GStreamer framework. GStreamer offers a pipeline-base framework for image-processing.

GStreamer

Kinova recommends that developers use the GStreamer framework for handling the camera's sensor streams. GStreamer offers a pipeline-based framework that allows you to link together plugins for image-processing workflows.

Requirements:

- GStreamer version: 1.8.3 and above
- Supported operating systems:
  - Windows 7 and later
  - Ubuntu 16.04 and later

Using GStreamer

GStreamer pipelines can be called from the command line using the gst-launch-1.0 utility.

© 2025 Kinova inc. All rights reserved.

For integration with applications, GStreamer offers a number of language bindings, which include both C++ and Python.

Official documentation for the GStreamer framework, including installation instructions, application development guidance, and tutorials can be accessed here: https://gstreamer.freedesktop.org/documentation/

Windows command examples

Examples of using GStreamer with the robot vision module camera streams on the Windows command line.

Color stream CLI example: command to display the color stream

```
gst-launch-1.0.exe rtspsrc location=rtsp://192.168.1.10/color latency=30 !
rtph264depay ! avdec_h264 ! autovideosink
```

Unpacking the example:

- `gst-launch-1.0.exe`: launch GStreamer
- `rtspsrc location=rtsp://192.168.1.10/color latency=30`: connect to the *RTSP* server at the color stream URL with latency of 30 ms.
- `rtph264depay`: Extract H.264 video *payload* from RTP packets
- `avdec_h264`: decode H.264 video
- `autovideosink`: search computer registry for video sink (player) and plays decoded video stream.

Depth stream CLI example: command to display the depth stream

```
gst-launch-1.0.exe rtspsrc location=rtsp://192.168.1.10/depth latency=30 !
rtpgstdepay ! videoconvert ! autovideosink
```

Unpacking the example:

- `gst-launch-1.0.exe`: launch GStreamer
- `rtspsrc location=rtsp://192.168.1.10/depth latency=30`: connect to the RTSP server at the color stream URL with latency of 30 ms.
- `rtpgstdepay`: extract GStreamer buffers from RTP packets
- `videoconvert`: automatically convert the video to a format understandable to the chosen video sink in the next step
- `autovideosink`: search computer registry for video sink (player) and plays decoded video stream.

© 2025 Kinova inc. All rights reserved.

Linux command examples

Examples of using GStreamer with the robot vision module camera streams on the Linux command line.

Color stream CLI example: command to display the color stream

```
gst-launch-1.0 rtspsrc location=rtsp://192.168.1.10/color latency=30 !
rtph264depay ! avdec_h264 ! autovideosink
```

Unpacking the example:

- `gst-launch-1.0`: launch GStreamer
- `rtspsrc location=rtsp://192.168.1.10/color latency=30`: connect to the *RTSP* server at the color stream URL with latency of 30 ms.
- `rtph264depay`: extract H.264 video *payload* from RTP packets
- `avdec_h264`: decode H.264 video
- `autovideosink`: search computer registry for video sink (player) and play decoded video stream.

Depth stream CLI example: command to display the depth stream

```
gst-launch-1.0 rtspsrc location=rtsp://192.168.1.10/depth latency=30 !
rtpgstdepay ! videoconvert ! autovideosink
```

Unpacking the example:

- `gst-launch-1.0`: launch GStreamer
- `rtspsrc location=rtsp://192.168.1.10/depth latency=30`: connect to the RTSP server at the color stream URL with latency of 30 ms.
- `rtpgstdepay`: extract GStreamer buffers from RTP packets
- `videoconvert`: automatically convert the video to a format understandable to the chosen video sink in the next step
- `autovideosink`: search computer registry for video sink (player) and play decoded video stream.

© 2025 Kinova inc. All rights reserved.

Kinova® Kortex™ ROS vision module package and Github overview

Describes the *ROS*vision module package for the robot.

The Kinova® Kortex™ ROS vision module package provides helper methods and launch scripts to access the Gen3 Ultra lightweight robot vision module depth and color sensor streams within *ROS*.

For more details, including documentation, see the Kinova ros_kortex_vision GitHub repository at github.com/kinovarobotics.com/ros_kortex_vision.

© 2025 Kinova inc. All rights reserved.

Guidance for advanced users

Overview

The advanced guidance section gathers together reference information on topics useful to advanced users of the robot.

Introduction

The following contents are intended for advanced users.

Reference frames and transformations

Standard robot frames

Describes the standard frames of the robotic arm.

The robot has two standard *frames*:

- *base frame* (base reference frame)
- rotating frame (actuator 1 reference frame)
- *tool frame* (*end-effector* reference frame)

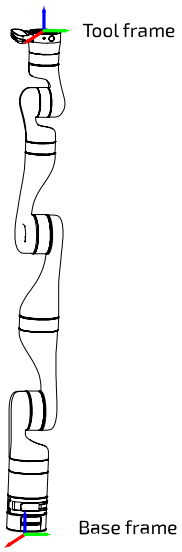

Figure 81: Two standard frames

Different *control modes* make use of different frames.

© 2025 Kinova inc. All rights reserved.

Homogeneous transforms

Homogeneous transforms for the robot are provided. Homogeneous transforms define transformations between successive reference frames in the robot, allowing coordinates in one frame to be expressed in terms of another.

Introduction

The forward kinematics of the robot are determined by homogeneous transform matrices. These matrices represent the transformations from one *frame* (*base*, *joint*, or interface) to the next along the kinematic chain. These transformations allow for the coordinates in one frame to be expressed in terms of another.

The overall transformation from the *base frame* to the *tool frame* is given by:

For 7 DoF robot:

$${}^{B}T^{*}_{\mathrm{TOOL}} = {}^{B}T^{*1}_{1}T^{*2}_{2}T^{*3}_{3}T^{*4}_{4}T^{*5}_{5}T^{*6}_{6}T^{*7}_{7}T^{*}_{\mathrm{TOOL}}$$

For 6 DoF robot:

$${}^{B}T^{*}_{\mathrm{TOOL}} = {}^{B}T^{*1}_{1}T^{*2}_{2}T^{*3}_{3}T^{*4}_{4}T^{*5}_{5}T^{*6}_{6}T^{*7}_{7}T^{*}_{\mathrm{TOOL}}$$

Here:

$${}^{i\text{-}1}T^{*}_{i} = {}^{i\text{-}1}T_{i} * R_{z}(q_{i})$$

Where:

${}^{i\text{-}1}T^{*}_{i}$ is the matrix for the general transformation matrix from frame [i-1] to frame [i].

${}^{i\text{-}1}T_{i}$ is the transform from the previous frame [i-1] to the current frame [i] when q_i, the angle for joint i, is 0 (Here, q_i is the angle in radians).

$R_z(q_i)$ is the transformation matrix for a rotation of q_i around joint i (the z axis for the joint frame is always defined to be along the joint axis of rotation.):

$$R_{z}(q_{i}) = \begin{pmatrix} cq_i & -sq_i & 0 & 0 \\ sq_i & cq_i & 0 & 0 \\ 0 & 0 & 1 & 0 \\ 0 & 0 & 0 & 1 \end{pmatrix}$$

$cq_i = \cos(q_i)$ and $sq_i = \sin(q_i)$

© 2025 Kinova inc. All rights reserved.

Homogeneous transform matrices - 7 DoF spherical wrist

Homogeneous transform matrices for the 7 DoF spherical wrist robot.

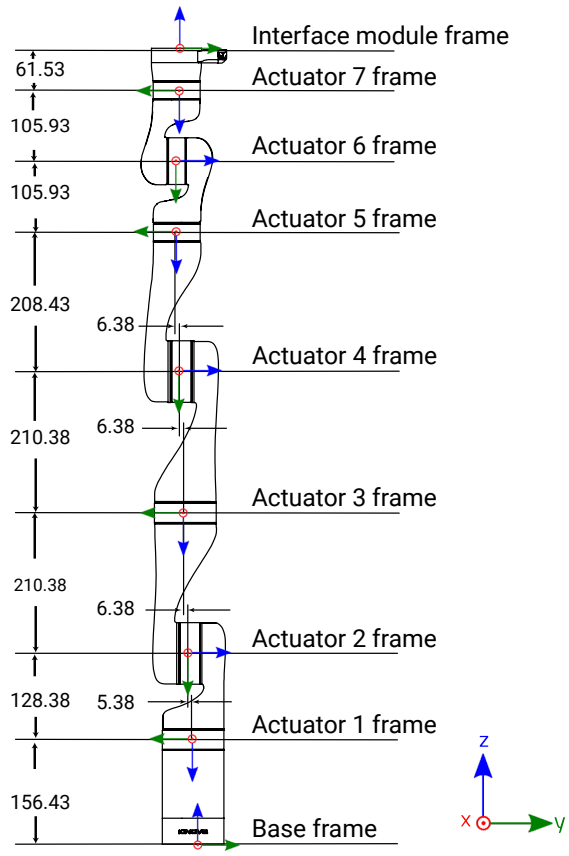

Figure 82: 7DoF robot frame definitions and dimensions (all joints at 0 position, dimensions in mm)

Table 90: 7 DoF homogeneous transformation matrices

Transformation	${}^{i-1}T_i$	${}^{i-1}T^*_i$
Base to frame 1	${}^{B}T_1 = \begin{pmatrix} 1 & 0 & 0 & 0 \\ 0 & -1 & 0 & 0 \\ 0 & 0 & -1 & 0.15643 \\ 0 & 0 & 0 & 1 \end{pmatrix}$	${}^{B}T^*_1 = \begin{pmatrix} cq_1 & -sq_1 & 0 & 0 \\ -sq_1 & -cq_1 & 0 & 0 \\ 0 & 0 & -1 & 0.15643 \\ 0 & 0 & 0 & 1 \end{pmatrix}$
Frame 1 to frame 2	${}^{1}T_2 = \begin{pmatrix} 1 & 0 & 0 & 0 \\ 0 & 0 & -1 & 0.00538 \\ 0 & 1 & 0 & -0.12838 \\ 0 & 0 & 0 & 1 \end{pmatrix}$	${}^{1}T^*_2 = \begin{pmatrix} cq_2 & -sq_2 & 0 & 0 \\ 0 & 0 & -1 & 0.00538 \\ sq_2 & cq_2 & 0 & -0.12838 \\ 0 & 0 & 0 & 1 \end{pmatrix}$

© 2025 Kinova inc. All rights reserved.

Transformation	${}^{i-1}T_i$	${}^{i-1}T^*_i$
Frame 2 to frame 3	${}^{2}T_3 = \begin{pmatrix} 1 & 0 & 0 & 0 \\ 0 & 0 & 1 & -0.21038 \\ 0 & -1 & 0 & -0.00638 \\ 0 & 0 & 0 & 1 \end{pmatrix}$	${}^{2}T^*_3 = \begin{pmatrix} cq_3 & -sq_3 & 0 & 0 \\ 0 & 0 & 1 & -0.21038 \\ -sq_3 & -cq_3 & 0 & -0.00638 \\ 0 & 0 & 0 & 1 \end{pmatrix}$
Frame 3 to frame 4	${}^{3}T_4 = \begin{pmatrix} 1 & 0 & 0 & 0 \\ 0 & 0 & -1 & 0.00638 \\ 0 & 1 & 0 & -0.21038 \\ 0 & 0 & 0 & 1 \end{pmatrix}$	${}^{3}T^*_4 = \begin{pmatrix} cq_4 & -sq_4 & 0 & 0 \\ 0 & 0 & -1 & 0.00638 \\ sq_4 & cq_4 & 0 & -0.21038 \\ 0 & 0 & 0 & 1 \end{pmatrix}$
Frame 4 to frame 5	${}^{4}T_5 = \begin{pmatrix} 1 & 0 & 0 & 0 \\ 0 & 0 & 1 & -0.20843 \\ 0 & -1 & 0 & -0.00638 \\ 0 & 0 & 0 & 1 \end{pmatrix}$	${}^{4}T^*_5 = \begin{pmatrix} cq_5 & -sq_5 & 0 & 0 \\ 0 & 0 & 1 & -0.20843 \\ -sq_5 & -cq_5 & 0 & -0.00638 \\ 0 & 0 & 0 & 1 \end{pmatrix}$
Frame 5 to frame 6	${}^{5}T_6 = \begin{pmatrix} 1 & 0 & 0 & 0 \\ 0 & 0 & -1 & 0 \\ 0 & 1 & 0 & -0.10593 \\ 0 & 0 & 0 & 1 \end{pmatrix}$	${}^{5}T^*_6 = \begin{pmatrix} cq_6 & -sq_6 & 0 & 0 \\ 0 & 0 & -1 & 0 \\ sq_6 & cq_6 & 0 & -0.10593 \\ 0 & 0 & 0 & 1 \end{pmatrix}$
Frame 6 to frame 7	${}^{6}T_7 = \begin{pmatrix} 1 & 0 & 0 & 0 \\ 0 & 0 & 1 & -0.10593 \\ 0 & -1 & 0 & 0 \\ 0 & 0 & 0 & 1 \end{pmatrix}$	${}^{6}T^*_7 = \begin{pmatrix} cq_7 & -sq_7 & 0 & 0 \\ 0 & 0 & 1 & -0.10593 \\ -sq_7 & -cq_7 & 0 & 0 \\ 0 & 0 & 0 & 1 \end{pmatrix}$
Frame 7 to interface module	${}^{7}T_{\mathrm{INT}} = \begin{pmatrix} 1 & 0 & 0 & 0 \\ 0 & -1 & 0 & 0 \\ 0 & 0 & -1 & -0.06153 \\ 0 & 0 & 0 & 1 \end{pmatrix}$	

Note: units are in meters for homogeneous transform translations in the right-hand column of each matrix.

© 2025 Kinova inc. All rights reserved.

Homogeneous transform matrices - 6 DoF spherical wrist

Homogeneous transform matrices for the 6 DoF spherical wrist robot.

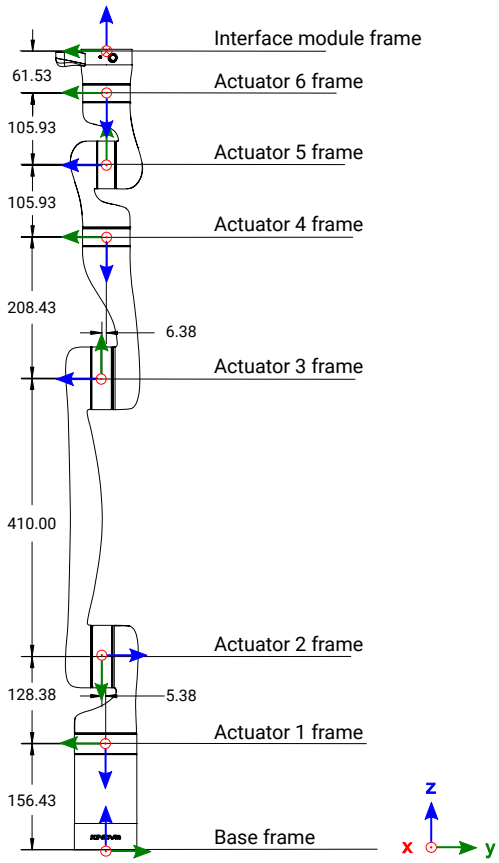

Figure 83: 6 DoF robot frame definitions and dimensions (all joints at 0 position, dimensions in mm)

Table 91: 6 DoF homogeneous transformation matrices

Transformation	${}^{i-1}T_i$	${}^{i-1}T^*_i$
Base to frame 1	${}^{B}T_1 = \begin{pmatrix} 1 & 0 & 0 & 0 \\ 0 & -1 & 0 & 0 \\ 0 & 0 & -1 & 0.15643 \\ 0 & 0 & 0 & 1 \end{pmatrix}$	${}^{B}T^*_1 = \begin{pmatrix} cq_1 & -sq_1 & 0 & 0 \\ -sq_1 & -cq_1 & 0 & 0 \\ 0 & 0 & -1 & 0.15643 \\ 0 & 0 & 0 & 1 \end{pmatrix}$
Frame 1 to frame 2	${}^{1}T_2 = \begin{pmatrix} 1 & 0 & 0 & 0 \\ 0 & 0 & -1 & 0.00538 \\ 0 & 1 & 0 & -0.12838 \\ 0 & 0 & 0 & 1 \end{pmatrix}$	${}^{1}T^*_2 = \begin{pmatrix} cq_2 & -sq_2 & 0 & 0 \\ 0 & 0 & -1 & 0.00538 \\ sq_2 & -cq_2 & 0 & -0.12384 \\ 0 & 0 & 0 & 1 \end{pmatrix}$

© 2025 Kinova inc. All rights reserved.

Transformation	${}^{i-1}T_i$	${}^{i-1}T^*_i$
Frame 2 to frame 3	${}^{2}T_3 = \begin{pmatrix} 1 & 0 & 0 & 0 \\ 0 & -1 & 0 & -0.41 \\ 0 & 0 & -1 & 0 \\ 0 & 0 & 0 & 1 \end{pmatrix}$	${}^{2}T^*_3 = \begin{pmatrix} cq_3 & -sq_3 & 0 & 0 \\ -sq_3 & -cq_3 & 0 & -0.41 \\ 0 & 0 & -1 & 0 \\ 0 & 0 & 0 & 1 \end{pmatrix}$
Frame 3 to frame 4	${}^{3}T_4 = \begin{pmatrix} 1 & 0 & 0 & 0 \\ 0 & 0 & -1 & 0.20843 \\ 0 & 1 & 0 & -0.00638 \\ 0 & 0 & 0 & 1 \end{pmatrix}$	${}^{3}T^*_4 = \begin{pmatrix} cq_4 & -sq_4 & 0 & 0 \\ 0 & 0 & -1 & 0.20843 \\ sq_4 & cq_4 & 0 & -0.00638 \\ 0 & 0 & 0 & 1 \end{pmatrix}$
Frame 4 to frame 5	${}^{4}T_5 = \begin{pmatrix} 1 & 0 & 0 & 0 \\ 0 & 0 & 1 & 0 \\ 0 & -1 & 0 & -0.10593 \\ 0 & 0 & 0 & 1 \end{pmatrix}$	${}^{4}T^*_5 = \begin{pmatrix} cq_5 & -sq_5 & 0 & 0 \\ 0 & 0 & 1 & 0 \\ -sq_5 & -cq_5 & 0 & -0.10593 \\ 0 & 0 & 0 & 1 \end{pmatrix}$
Frame 5 to frame 6	${}^{5}T_6 = \begin{pmatrix} 1 & 0 & 0 & 0 \\ 0 & 0 & -1 & 0.10593 \\ 0 & 1 & 0 & 0 \\ 0 & 0 & 0 & 1 \end{pmatrix}$	${}^{5}T^*_6 = \begin{pmatrix} cq_6 & -sq_6 & 0 & 0 \\ 0 & 0 & -1 & 0.10593 \\ sq_6 & cq_6 & 0 & 0 \\ 0 & 0 & 0 & 1 \end{pmatrix}$
Frame 6 to interface module	${}^{6}T_{\mathrm{INT}} = \begin{pmatrix} -1 & 0 & 0 & 0 \\ 0 & 1 & 0 & 0 \\ 0 & 0 & -1 & -0.06153 \\ 0 & 0 & 0 & 1 \end{pmatrix}$	

Note: units are in meters for homogeneous transform translations in the right-hand column of each matrix.

Vision module sensors reference frames

Homogeneous transforms defining the reference *frames* of the video module sensors in terms of the interface module frame. These are useful in correlating data from the color and depth sensors.

Overview

The vision module captures data about the environment of the robot via two sensors:

- color sensor
- depth sensor

Developing vision applications and vision-based control of the robot will require correlating the data from these two sensors with each other and with the *position* of the *end effector*.

© 2025 Kinova inc. All rights reserved.

Camera frames

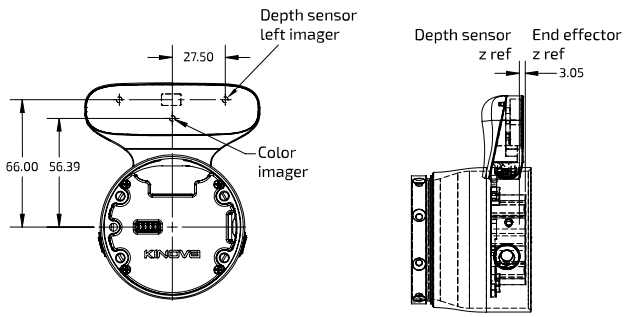

Figure 84: Vision sensors

Color sensor

The reference frame for the color sensor has the same *orientation* as that of the end effector, but with an offset of (dx, dy, dz) = (0 mm, 56.39 mm, -3.05 mm).

Depth sensor

The origin for the depth center frame of reference is defined at the center of the left imager, directly in front of the lens of the left imager. The z offset for the depth sensor reference frame is the same as for the color sensor reference frame, and the y offset is 66.00 mm. Because the left imager is used as a reference, there is also an x offset of 27.50 mm.

The matrices for the reference frame transformations from end effector frame to vision sensor frame are shown in the table below.

Table 92: Reference frame transformations from end effector to sensors (displacement units in meters)

Transformation	Transformation matrix
End effector to color sensor	${}^{\mathrm{INT}}T_{\mathrm{COLOR}} = \begin{pmatrix} 1 & 0 & 0 & 0 \\ 0 & 1 & 0 & 0.05639 \\ 0 & 0 & 1 & -0.00305 \\ 0 & 0 & 0 & 1 \end{pmatrix}$
End effector to depth sensor	${}^{\mathrm{INT}}T_{\mathrm{DEPTH}} = \begin{pmatrix} 1 & 0 & 0 & 0.02750 \\ 0 & 1 & 0 & 0.06600 \\ 0 & 0 & 1 & -0.00305 \\ 0 & 0 & 0 & 1 \end{pmatrix}$

© 2025 Kinova inc. All rights reserved.

Denavit-Hartenberg (DH) parameters

DH parameters the robot are provided.

DH parameters

Denavit-Hartenberg (DH) parameters offer another convenient way to specify the reference *frame* transformations for the robot kinematic chain.

The Classical DH parameters convention transformation expresses a frame in terms of the previous as:

$$ {}^{i}T_{i+1} = \begin{pmatrix} \cos(\theta_i) & -\cos(\alpha_i)\sin(\theta_i) & \sin(\alpha_i)\sin(\theta_i) & a_i\cos(\theta_i) \\ \sin(\theta_i) & \cos(\alpha_i)\cos(\theta_i) & -\sin(\alpha_i)\cos(\theta_i) & a_i\sin(\theta_i) \\ 0 & \sin(\alpha_i) & \cos(\alpha_i) & d_i \\ 0 & 0 & 0 & 1 \end{pmatrix} $$

Figure 85: DH parameters Classical frames transformations

Denavit-Hartenberg (DH) parameters - 7 DoF spherical wrist

DH parameters for the 7 DoF spherical wrist robot.

Table 93: 7 DoF spherical Classical DH parameters

i	α_i (radians)	a_i (mm)	d_i (mm)	θ_i (radians)
0 (from base)	π	0.0	0.0	0
1	π/2	0.0	- (0.1564 + 0.1284)	q_1
2	π/2	0.0	- (0.0054 + 0.0064)	q_2 + π
3	π/2	0.0	- (0.2104 + 0.2104)	q_3 + π
4	π/2	0.0	- (0.0064 + 0.0064)	q_4 + π
5	π/2	0.0	- (0.2084 + 0.1059)	q_5 + π
6	π/2	0.0	0.0	q_6 + π
7 (to interface)	π	0.0	- (0.1059 + 0.0615)	q_7 + π

Here q_1, q_2... refers to the *joint angles*.

The figures in the chart are based on the following frames definitions:

© 2025 Kinova inc. All rights reserved.

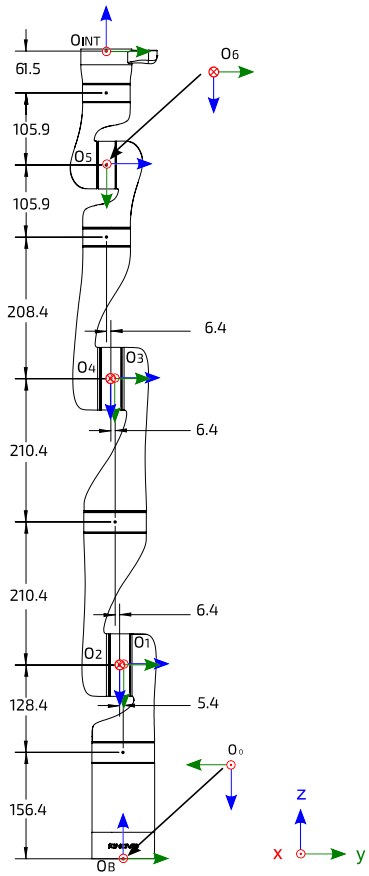

Figure 86: Denavit-Hartenberg frames definitions

Denavit-Hartenberg (DH) parameters - 6 DoF spherical wrist

DH parameters for the 6 DoF spherical wrist robot.

Table 94: 6 DoF spherical Classical DH parameters

i	α_i (radians)	a_i (mm)	d_i (mm)	θ_i (radians)
0 (from base)	0.0	0.0	π	0.0
1	0.0	-(156.43 + 128.38)	π/2	q_1
2	410.0	-5.38	π	q_2 - π/2
3	0.0	-6.38	π/2	q_3 - π/2
4	0.0	-(208.43+105.93)	π/2	q_4 + π
5	0.0	0.0	π/2	q_5 + π
6 (to interface)	0.0	-(105.93+61.53)	π	q_6 + π

Here q_1, q_2... refers to the *joint angles*.

© 2025 Kinova inc. All rights reserved.

The figures in the chart are based on the following frames definitions:

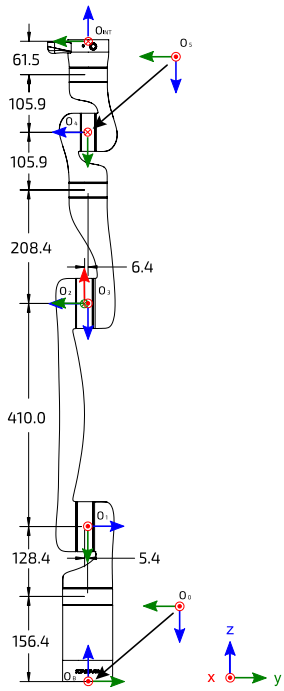

Figure 87: Denavit-Hartenberg frames definitions

7 DoF singular configurations

Description of the singular configurations of the 7 DoF robot.

Singular configurations overview

Singularities generally occur when a particular angular configuration of the robot causes axes to be aligned. This causes the robot to lose degrees of freedom and experience limitations in movement in some directions while operating the robot in *Cartesian mode*. There are many ways that this could potentially happen, and an exhaustive listing would be difficult. The following table highlights some important singular configurations for the 7 DoF robot, explaining how they occur and how the robot behavior is altered near the singularity while in Cartesian mode.

© 2025 Kinova inc. All rights reserved.

Table 95: Selected singular configurations description

Singularity	Definition	Description
Boundary singularity	The arm is at full reach. Joint 4 (elbow) is at 0°. The arm cannot move any farther in the direction it is currently reaching out.	The robot will slowly try to reach a straight position. If you try to move the robot purely in the x or y direction starting from this position, you will not be able to. The robot will follow the command as best as possible. It will move in x and y while going down in the z direction.
Joints 2 and 3 singularity	Joint 2 is at 0° so joints 1 and 3 are perfectly aligned and have the same effect. Joint 3 is at 90° or at 270° so that the axes of joint 2 and joint 4 are perpendicular. The robot can no longer move purely along an *axis* in translation.	Due to singularity crossing algorithm, the robot will make a minor deviation from a straight line *trajectory* when going through this *pose* in Cartesian mode.
Joints 2 and 6 singularity	Joint 2 is at 0° so that joints 1 and 3 are perfectly aligned and have the same effect. Joint 6 is at 0° so that joints 5 and 7 are perfectly aligned and have the same effect. The hand cannot rotate in one direction anymore.	Due to singularity crossing algorithm, the robot will make a minor deviation from a straight line trajectory when going through this pose in Cartesian mode.
Joints 5 and 6 singularity	Joint 6 is at 0° so that joints 5 and 7 are perfectly aligned and have the same effect. Joint 5 is at 90° or at 270° so that the axes of joint 4 and joint 6's axis are perpendicular. The robot can no longer complete pure rotations around an axis.	Due to singularity crossing algorithm, the robot will make a minor deviation from a straight line trajectory when going through this pose in Cartesian mode.

© 2025 Kinova inc. All rights reserved.

Singularity	Definition	Description
Joints 1 and 7 singularity	Joints 2-5 are positioned so that joints 1 and 7 are perfectly aligned and have the same effect (infinite possibilities of joint combinations).	Due to singularity crossing algorithm, the robot will make a minor deviation from a straight line trajectory when going through this pose in Cartesian mode.

6 DoF singular configurations

This section describes the singularity configurations of the 6 DoF robot.

Singularity configurations overview

Singularities generally occur when a particular angular configuration of the robot causes axes to be aligned, causing the robot to lose degrees of freedom and experience limitations in movement in some directions while operating the robot in *Cartesian mode*. There are many ways that this could potentially happen, and an exhaustive listing would be difficult. The following table highlights some important singularities for the 6 DoF robot, explaining how they occur and how the robot behavior is altered near the singularity while in Cartesian mode.

Table 96: Selected singular configurations description

Singularity	Definition	Description
Boundary singularity	The robot is at full extension.	The robot will slowly try to reach a straight *position*. If you try to move the robot purely in the x or y direction starting from this position, you will not be able to. The robot will follow the command as best as possible. It will move in x and y while going down in the z direction.
Joints 1 and 4 singularity	Joints 2 and 3 are at 0° so that joints 1 and 4 are aligned.	Due to singularity crossing algorithm, the robot will make a minor deviation from a straight line *trajectory* when going through this *pose* in Cartesian mode.

© 2025 Kinova inc. All rights reserved.

Singularity	Definition	Description
Joints 1 and 6 singularity	Joints 2, 3, and 5 are at a position such that Joints 1 and 6 are aligned and have the same effect. Happens if $\theta_2 + \theta_3 + \theta_5 = 0$ if θ is defined between ± π.	Due to singularity crossing algorithm, the robot will make a minor deviation from a straight line trajectory when going through this pose in Cartesian mode.
Joints 4 and 6 singularity	Joint 5 is at 0° so joints 4 and 6 are perfectly aligned and have the same effect.	Due to singularity crossing algorithm, the robot wile make a minor deviation from a straight line trajectory when going through this pose in Cartesian mode.

Inertial parameters definition

Inertial parameters are provided for the robot.

Overview

The following tables describe the key inertial parameters of each independently moving rigid link segment of the 7 robot. This includes:

- mass in kg
- centers of masses in meters
- moments of inertia in kg * m^2

The six distinct moments of inertia (Ixx, Ixy, Ixz, Iyy, Iyz, Izz) are presented in tabular form.

Conventions used

The following conventions are used:

1. The *center of mass* of a link is always expressed in terms of the reference *frame* of the precedent *joint*.
2. The mass of a link segment includes the shell and portions of the actuators at each end of the link (as applicable) that are enclosed within the link and move rigidly with the link.
3. The moments of inertia of the link segments are taken in a frame defined at the center of mass of the link segment and aligned with the precedent joint frame.

Note: These conventions align with those used in URDF files in the `<inertial>` section of `<link>` definitions.

© 2025 Kinova inc. All rights reserved.

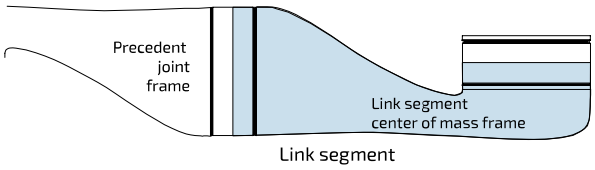

Figure 88: Inertial parameters conventions

Inertial parameters of the 7 DoF robot

Inertial parameters of the 7 DoF robot.

Overview

The following tables describe the key inertial parameters of the link segments of the 7 DoF robot.

Table 97: Base

Physical quantity	Value	
mass (kg)	1.697	
center of mass coordinates (m)	[-0.000648, -0.000166, 0.084487]	
moments of inertia (kg · m^2)	Ixx	0.004622
	Ixy	0.000009
	Ixz	0.000060
	Iyy	0.004495
	Iyz	0.000009
	Izz	0.002079

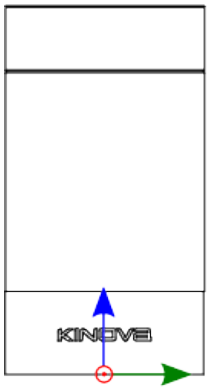

© 2025 Kinova inc. All rights reserved.

Table 98: Link 1

Physical quantity	Value	
mass (kg)	1.377	
center of mass coordinates (m)	[-0.000023, -0.010364, -0.073360]	
moments of inertia (kg · m^2)	Ixx	0.004570
	Ixy	0.000001
	Ixz	0.000002
	Iyy	0.004831
	Iyz	0.000448
	Izz	0.001409

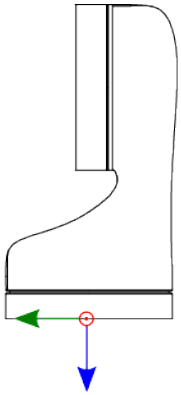

Table 99: Link 2

Physical quantity	Value	
mass (kg)	1.1636	
center of mass coordinates (m)	[-0.000044, -0.099580, -0.013278]	
moments of inertia (kg · m^2)	Ixx	0.011088
	Ixy	0.000005
	Ixz	0.000000
	Iyy	0.001072
	Iyz	-0.000691
	Izz	0.011255

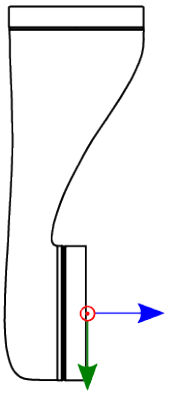

© 2025 Kinova inc. All rights reserved.

Table 100: Link 3

Physical quantity	Value	
mass (kg)	1.1636	
center of mass coordinates (m)	[-0.000044, -0.006641, -0.117892]	
moments of inertia (kg · m^2)	Ixx	0.010932
	Ixy	0.000000
	Ixz	-0.000007
	Iyy	0.011127
	Iyz	0.000606
	Izz	0.001043

Table 101: Link 4

Physical quantity	Value	
mass (kg)	0.930	
center of mass coordinates (m)	[-0.000018, -0.075478, -0.015006]	
moments of inertia (kg · m^2)	Ixx	0.008147
	Ixy	-0.000001
	Ixz	0.000000
	Iyy	0.000631
	Iyz	-0.000500
	Izz	0.008316

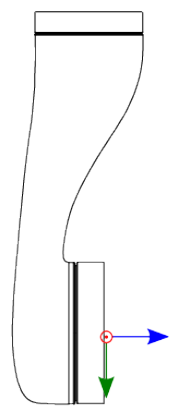

© 2025 Kinova inc. All rights reserved.

Table 102: Link 5

Physical quantity	Value	
mass (kg)	0.678	
center of mass coordinates (m)	[0.000001, -0.009432, -0.063883]	
moments of inertia (kg · m^2)	Ixx	0.001596
	Ixy	0.000000
	Ixz	0.000000
	Iyy	0.001607
	Iyz	0.000256
	Izz	0.000399

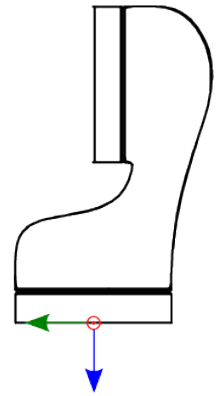

Table 103: Link 6

Physical quantity	Value	
mass (kg)	0.678	
center of mass coordinates (m)	[0.000001, -0.045483, -0.009650]	
moments of inertia (kg · m^2)	Ixx	0.001641
	Ixy	0.000000
	Ixz	0.000000
	Iyy	0.000410
	Iyz	-0.000278
	Izz	0.001641

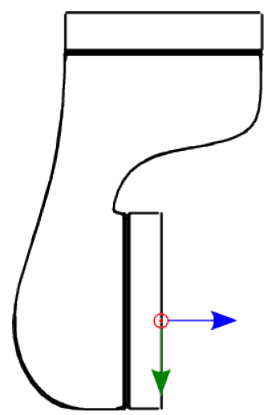

© 2025 Kinova inc. All rights reserved.

Table 104: Interface module without vision module

Physical quantity	Value	
mass (kg)	0.364	
center of mass coordinates (m)	[-0.000093, 0.000132, -0.022905]	
moments of inertia (kg · m^2)	Ixx	0.000214
	Ixy	0.000000
	Ixz	0.000001
	Iyy	0.000223
	Iyz	-0.000002
	Izz	0.000240

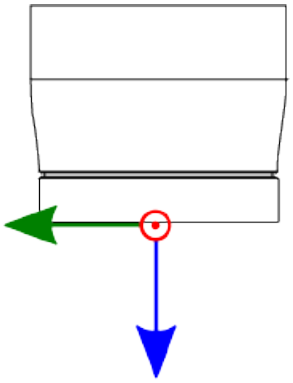

Table 105: Interface module with vision module

Physical quantity	Value	
mass (kg)	0.500	
center of mass coordinates (m)	[-0.000281, -0.011402, -0.029798]	
moments of inertia (kg · m^2)	Ixx	0.000587
	Ixy	0.000003
	Ixz	0.000003
	Iyy	0.000369
	Iyz	0.000118
	Izz	0.000609

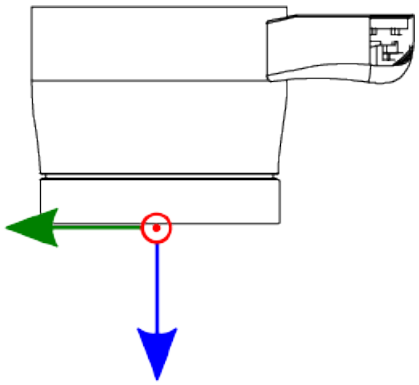

Important: All Gen3 Ultra lightweight robots with brake configuration are obsolete; they are not sold. Clients who have bought Gen3 Ultra lightweight robots with brake configuration are supported.

Refer to *Kinova® Gen3 Ultra lightweight robot user guide r9.2* in the Kinova Artifactory archives for information related to brakes.

© 2025 Kinova inc. All rights reserved.

Inertial parameters of the 6 DoF robot

Inertial parameters of the 6 DoF robot.

Overview

The following tables describe the key inertial parameters of the link segments of the 6 DoF robot.

Table 106: Base

Physical quantity	Value		Image
mass (kg)	1.697		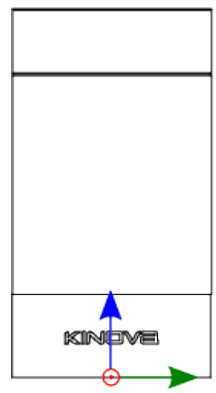
center of mass coordinates (m)	[-0.000648, -0.000166, 0.084487]		
moments of inertia (kg · m^2)	Ixx	0.004622	
	Ixy	0.000009	
	Ixz	0.000060	
	Iyy	0.004495	
	Iyz	0.000009	
	Izz	0.002079	

Table 107: Link 1

Physical quantity	Value		Image
mass (kg)	1.377		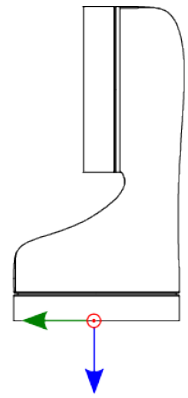
center of mass coordinates (m)	[-0.000023, -0.010364, -0.073360]		
moments of inertia (kg · m^2)	Ixx	0.004570	
	Ixy	0.000001	
	Ixz	0.000002	
	Iyy	0.004831	
	Iyz	0.000448	
	Izz	0.001409	

© 2025 Kinova inc. All rights reserved.

Table 108: Link 2

Physical quantity	Value		Image
mass (kg)	1.262 kg		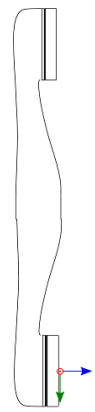
center of mass coordinates (m)	[0.000035, -0.208207, -0.018890]		
moments of inertia (kg · m^2)	Ixx	0.046752	
	Ixy	-0.000009	
	Ixz	0.000000	
	Iyy	0.000850	
	Iyz	-0.000098	
	Izz	0.047188	

Table 109: Link 3

Physical quantity	Value		Image
mass (kg)	0.930		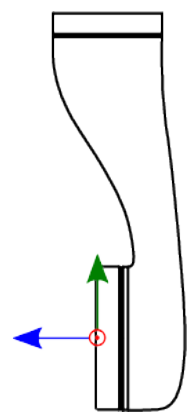
center of mass coordinates (m)	[0.000018, 0.076168, -0.013970]		
moments of inertia (kg · m^2)	Ixx	0.008292	
	Ixy	-0.000001	
	Ixz	0.000000	
	Iyy	0.000628	
	Iyz	0.000432	
	Izz	0.008464	

© 2025 Kinova inc. All rights reserved.

Table 110: Link 4

Physical quantity	Value		Image
mass (kg)	0.678		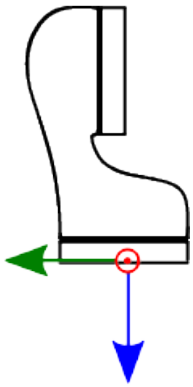
center of mass coordinates (m)	[-0.000001, 0.008466, -0.062937]		
moments of inertia (kg · m^2)	Ixx	0.001645	
	Ixy	0.000000	
	Ixz	0.000000	
	Iyy	0.001666	
	Iyz	-0.000234	
	Izz	0.000389	

Table 111: Link 5

Physical quantity	Value		Image
mass (kg)	0.678		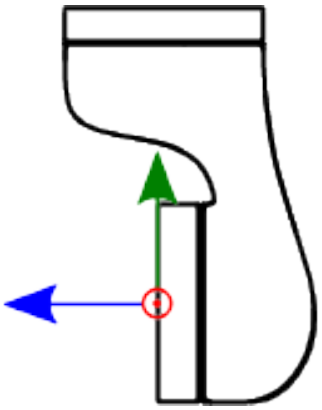
center of mass coordinates (m)	[-0.000001, 0.046429, -0.008704]		
moments of inertia (kg · m^2)	Ixx	0.001685	
	Ixy	0.000000	
	Ixz	0.000000	
	Iyy	0.000400	
	Iyz	0.000255	
	Izz	0.001696	

© 2025 Kinova inc. All rights reserved.

Table 112: Interface module without vision module

Physical quantity	Value		
mass (kg)	0.364		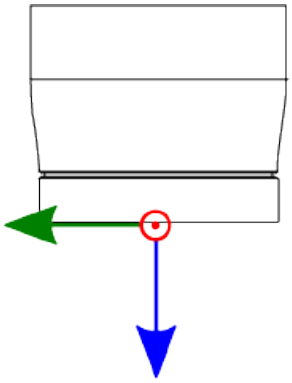
center of mass coordinates (m)	[-0.000093, 0.000132, -0.022905]		
moments of inertia ($kg \cdot m^2$)	Ixx	0.000214	
	Ixy	0.000000	
	Ixz	0.000001	
	Iyy	0.000223	
	Iyz	-0.000002	
	Izz	0.000240	

Table 113: Interface module with vision module

Physical quantity	Value		Image
mass (kg)	0.500		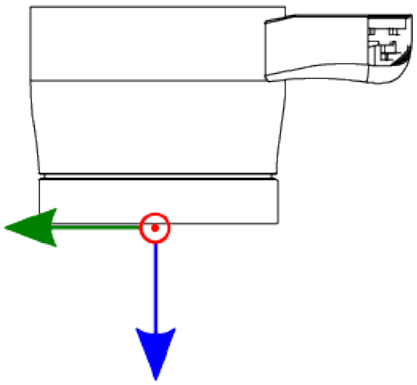
center of mass coordinates (m)	[0.000281, 0.011402, -0.029798]		
moments of inertia ($kg \cdot m^2$)	Ixx	0.000587	
	Ixy	0.000003	
	Ixz	0.000003	
	Iyy	0.000369	
	Iyz	-0.000118	
	Izz	0.000609	

Important: All Gen3 Ultra lightweight robots with brake configuration are obsolete; they are not sold. Clients who have bought Gen3 Ultra lightweight robots with brake configuration are supported.

Refer to *Kinova® Gen3 Ultra lightweight robot user guide r9.2* in the Kinova Artifactory archives for information related to brakes.

© 2025 Kinova inc. All rights reserved.

Maintenance and troubleshooting

Maintenance

Overview of maintenance tasks for the robot.

Maintenance overview

Currently, none of the components of the robot are field replaceable. Contact Kinova for assistance in the case of any component breakdown or malfunction.

Preventive Maintenance

Some preventive maintenance tasks are helpful for protecting your robot and getting the most out it over time:

- **Cleaning contacts on *base* controller** - keep contacts clear of dust and contamination, wiping electrical contacts regularly with a soft moistened cloth.

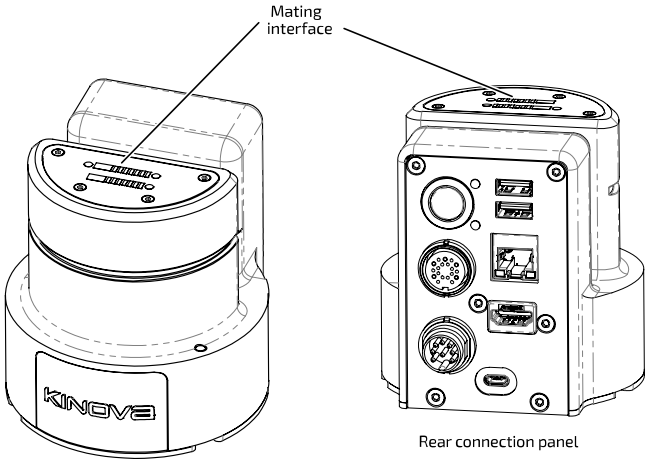

- **Fine adjustment of base clamp** - Some adjustment may be needed for the base clamp to ensure that the robot is firmly clamped onto the base controller. Within the clamp is an adjustment screw which can be adjusted to tighten the clamp as needed.

© 2025 Kinova inc. All rights reserved.

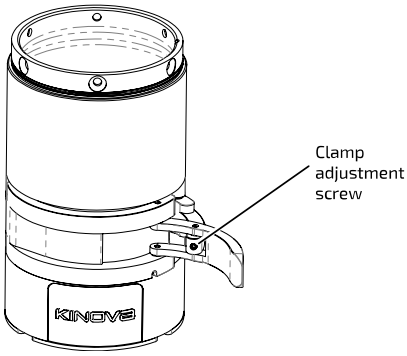

To tighten the clamp turn the screw clockwise using a 2 mm hex key in small, ¼ turn increments, testing the clamp after each increment.

Note: Over tightening the clamp can damage the clamp and base. Always make sure that the clamp can be closed using a reasonable amount of force.

- **Cleaning glass on vision module** - the cameras on the vision module are covered in glass. For best results, keep the glass clear of contamination that could block the view of the sensors. Wipe the glass regularly with a soft moistened cloth and wipe dry with a soft dry cloth.
- **Setting protection zones** - volumetric protection zones should be established around the robot to protect it from potential damage caused by collisions with known obstacles. Protection zones can be set using the Kinova® Kortex™ Kortex Web App.

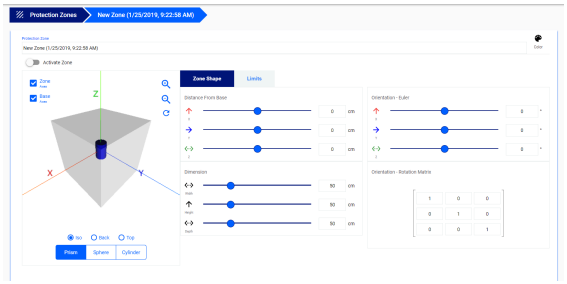

- **Updating robot firmware** - Kinova will periodically release software *upgrade packages* to fix known bugs and expand the capabilities of the robot. For best results, it is recommended to regularly update robot software using the Kortex Web App. The most up to date upgrade package is available for download via the Kinova website product technical resources page: kinovarobotics.com/knowledge-hub/gen3-ultra-lightweight-robot

- **Updating development packages** - Kinova will periodically release updates for the Kinova® Kortex™, Kinova® Kortex™ ROS, and Kinova® Kortex™ ROS vision packages on the

© 2025 Kinova inc. All rights reserved.

kinovarobotics/kortex, kinovarobotics/ros_kortex, and kinovarobotics/ros_kortex_vision GitHub repositories. These updates will fix known bugs and expand the capabilities of the robot.

Troubleshooting

Tips for troubleshooting robot issues.

If the robot loses a part (for example a shell due to impact) or if a part breaks, shut down the robot safely and leave it off. Contact Kinova technical support.

Troubleshooting resources

There are several resources that can be used to help diagnose issues when they occur:

- Kinova® Kortex™ Kortex Web App *notifications*
- Kortex Web Appmonitoring - the monitoring page provides useful status information on the robot components, including the *base*, all actuators, and the interface. Notably, currents, voltages, CPU core temperatures and motor temperatures from the sensors are updated in real-time on the monitoring page
- Kortex Web App safeties page - when a safety item's warning or error threshold is exceeded, the safety item will be highlighted in the Robot Configurations Safety page.
- Base controller *LED* indicators - LEDs on the robot base controller connector panel provide visual feedback on the robot status
- *API* errors
- GitHub - information on known issues and workarounds
- release notes

General tips for troubleshooting issues with the robot

When the robot enters a fault state, the robot will become unresponsive until the fault is cleared. The Xbox gamepad can be used to clear faults - press the left bumper once and proceed.

Consult the Kortex Web App:

- Check the **Monitoring** page for high-level status information on various components.
- Check the **Notifications** page for any recent *notifications*.
- Check the **Safeties** page to see if the robot has passed a warning or error threshold. If any safety us triggered, the safety item will be Look up the information on the safety for guidance on handling.

© 2025 Kinova inc. All rights reserved.

Remember that the behavior of the robot will change as the robot nears singularities or enters the envelope of *protection zones*. If robot behavior deviates from what you expect, verify whether one of these two cases applies.

For API-related errors, check the reference tables for guidance on the source of the error and how to deal with it.

Kinova recommends updating robot firmware and Kinova® Kortex™ API packages regularly to keep up with the latest bug fixes and ensure optimal performance.

As part of periodic software updates, Kinova will publish release notes on the Kinova website. These notes describe known issues, limitations, and workarounds, as well as information about new features and previous bugs fixed in the release.

If all else fails, try rebooting the robot.

If you're still experiencing issues, contact Kinova support via the website.

Base LEDs interpretation

Interpretation of the meanings of *LED* indicators on the robot base.

Overview

The *base* controller has two LEDs, one blue and one red / green.

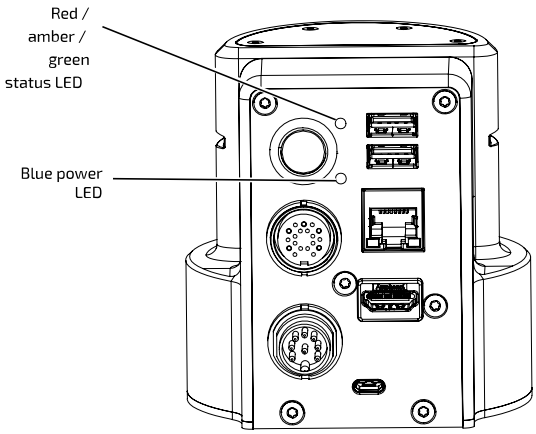

Figure 89: Base controller LEDs

Base controller LED details

© 2025 Kinova inc. All rights reserved.

Table 114: LED interpretation

Power LED		Status LED		Description
color	**status**	**color**	**status**	
n/a	off	n/a	off	system not powered
blue	blinking	n/a	off	system booting
blue	solid	amber	solid	system initializing
n/a	off	green	solid	system operating normally
blue	blinking	amber	solid	system currently updating at least one component
blue	solid	red	solid	system in error state

How to respond to safety warnings and errors

Guidance on probable causes for safety warnings and error states experienced when operating the robot.

Overview

The robot has a number of warning and error thresholds set for safety purposes. These are viewable (and in some case configurable) in the Web application. The following tables give more guidance as to the source of the problem when a safety threshold is triggered.

Safeties handling details

Table 115: Base safeties handling

Safety	Most Probable Cause
Incompatible Firmware version	• Firmware issue
Firmware Update Failure	• Firmware issue • Communication issue
Maximum Ambient Temperature	• CPU heat sink issue • Unknown thermal issue

© 2025 Kinova inc. All rights reserved.

Safety	Most Probable Cause
Maximum Core Temperature	• CPU heat sink issue • Unknown thermal issue
Joint Fault	• Joint error / warning state
Joint Detection Error	• Communication issue
Network Initialization Error	• Base CPU board issue
Maximum Current	• Shorted phases on a joint • Payload exceeded
Maximum Voltage	• Power supply issue • Electronic component failure
Minimum Voltage	• Power supply issue • Electronic component failure
Emergency Stop Activated	• XBox gamepad emergency stop button clicked • Web application emergency stop button clicked
Emergency Line Asserted	• Joint not programmed • Joint in a boot loop • Electrical component failure
Inrush Current Limiter Fault	• Payload exceeded • Electrical component failure

Table 116: Actuators safeties handling

Safety	Most Probable Cause
Following error	• Communication issue • Firmware issue
Maximum velocity	• Communication issue • Firmware issue
Maximum torque	• Strain gauge improperly soldered • Incorrect torque calibration

© 2025 Kinova inc. All rights reserved.

Safety	Most Probable Cause
Magnetic position	• Magnet improperly glued
Hall position	• Hall sensor major malfunction
Hall sequence	• Hall sequence major malfunction(s)
Input encoder Hall mismatch	• Dirt and/or particles on encoder disk
Input encoder index mismatch	• Dirt and/or particles on encoder disk
Input encoder magnetic mismatch	• Dirt and/or particles on encoder disk • Detached magnet on magnetic encoder
Maximum motor current	• Shorted phases • Bad motor
Non-volatile memory corrupted	• Incomplete calibration(s • No system information entered • No torque calibration
Motor driver fault	• Shorted phases • Hall sensor issue
Watchdog triggered	• Firmware issue
Fault Triggered by Brake Drive	Brake issue
Brake Release Motion Out of Range	Brake issue

© 2025 Kinova inc. All rights reserved.

Exporting the journal

Data from the Gen3 Ultra lightweight robot is continually saved. The saved information is useful for solving potential issues with the robot with help from Kinova Support.

Before you begin

Make sure you have an empty *USB* drive.

Make sure the robot is switched off.

About this task

When the saved data is collected, it is as if the robot has written a journal. Some people may refer to the journal as a log file.

For anyone to access the information, the data must move from the robot to an accessible location. That location is a journal, or log file, on a USB drive.

Procedure

1. Insert the empty USB drive on a computer.
2. Create an empty file on the USB drive and name it `logs`.
3. Insert the *USB* into one of the USB ports on the back of the *base* connector panel.
4. Boot the robot.
   The robot detects a USB drive with a file named `logs` on it. A file named `kinovaLogs.txt` is generated as a Kinova password-protected file.
5. Remove the USB drive from the robot after the robot is fully booted.
6. Insert the USB drive on a computer.
7. Search for the file `kinovaLogs.txt` and make sure its size is not 0.
8. Send the `kinovaLogs.txt` file to Kinova Support.

Contacting Kinova support

Here is where to turn for related support and advice.

For support and advice on hardware related issues, contact us at support@kinova.ca.

For development guidance and software-related questions, check out our GitHub repositories:

- Kinova® Kortex™ GitHub: github.com/kinovarobotics/kortex
- Kinova® Kortex™ ROS GitHub: github.com/kinovarobotics/ros_kortex
- Kinova® Kortex™ ROS vision GitHub: github.com/Kinovarobotics/ros_kortex_vision

© 2025 Kinova inc. All rights reserved.

- Kinova® Kortex™ MATLAB API GitHub: https://github.com/Kinovarobotics/matlab_kortex

© 2025 Kinova inc. All rights reserved.

Harmonized Standards, Declarations and Certificates

The following sections provides a list of harmonized standards, declarations and certificates for the Security arm.

Table 117: Applicable Standards

Item	Detail
EMI / *electromagnetic compatibility (EMC)*	*Comité International Spécial des Perturbations Radioélectriques (CISPR)* 11/24 (equivalent to EN 55011/55024)
	FCC class B (CFR 47 part 15)
Flammability Rating	UL94-V0 (shell, PCB)
	UL94-V1 (cables)
Laser	Class 1 Laser Product under the EN/IEC 60825-1, Edition 3 (2014), internationally It complies with FDA performance standards for laser products except for conformance with IEC 60825-1 Ed. 3 as described in Laser Notice No. 56, dated May 8, 2019. For more information, please refer to "Intel® RealSense™ Product Family D400 Series Datasheet", revision 015, March 2023, 337029-013(Intel-RealSense-D400-Series-Datasheet-March-2023.pdf).
Universal Serial Bus	USB 2.0
Ethernet	*IEEE* 802.3ab 1000BASE-T Half and Full Duplex
Wi-Fi	IEEE 802.11a/b/g/n (2.4ghz, 5ghz)
	Bluetooth 4.0
ISO / IEC	ISO 10218-1 *Industrial robots*
	ISO 12100 *Safety of machinery*
	ISO 14539 *Vocabulary only*
	IEC 60825-1 *Class 1 laser hardware limitation*
	IEC 60950-1 *Information Technology (IT) equipment - Safety*
	IEC 61000-6-1/6-3 *EMI / EMC*

© 2025 Kinova inc. All rights reserved.

Item	Detail
CE	2002/96/EC *Waste of Electrical and Electronic Equipment (WEEE)*WEEE
	2006/42/EC *Machinery directive*
	2011/65/EU *ROHS*
	2014/30/EU *EMC*
	2014/35/EU *LVD*
	2014/53/EU *Radio Equipment directive*

© 2025 Kinova inc. All rights reserved.

Glossary

action

something that the user wants the robot to do

Some examples:

- Reaching an end effector pose or set of joint angles
- Toggling *admittance* mode
- Changing a *position* or motion parameter
- Applying emergency stop or clear faults
- Adding a delay
- Sending a gripper command

The full set of action types is defined in the `Kinova.Api.Base` *API*.

admittance

human-robot interaction modes in which the robot responds to external efforts applied on the body and tool, and generates a motion to follow these efforts

angular mode

independent joint control; each axis of the manipulator is controlled separately

API

a software interface between the Kortex software and your own software

axis

a fixed line with direction;

used for the measurement of coordinates or angles, depending to whether the robot movement is linear or rotational

backdrive

to move the robot manually without using electrical power

base

the bottom-most part of the arm that is placed on a surface for installation; support section of the arm

base frame

the reference frame located at the center of the bottom surface of the arm's base; the origin frame in *Cartesian space*

base support

the stable platform to which the base is attached

blending

© 2025 Kinova inc. All rights reserved.

the process used by the robot to smooth the transition when reaching a waypoint that creates a change in direction in a *trajectory*.

Blending at a *waypoint* is defined by a blending radius that dictates at which distance from the associated waypoint the trajectory starts transitioning to the next one.

blocking

the inability for a robotic program to proceed to its next step until the current, blocking, action is finished

Cartesian admittance

mode of operation in which the application of external force to the *tool* guides the arm to a new *position*

Cartesian mode

mode of operation used to control the translational and orientation velocities of a *tool* in *Cartesian space*

Cartesian space

the Euclidean space described by X, Y and Z axes of the Cartesian *coordinate system*

center of mass

unique point of a rigid body where an applied force generates linear acceleration and no angular acceleration

CIDR

Classless Inter-Domain Routing

CISPR

Comité International Spécial des Perturbations Radioélectriques

closed loop control

the device is controlled in relation to either between sensed current state and goal state; used on the robot to control actuators

control modes

one of several modalities of controlling the motion of the robot while it is in run mode.

Different modes provide different means to describe or guide the desired motion.

Table 118: Existing control modes

Angular joystick	Cartesian waypoint trajectories
Angular trajectory	Cartesian admittance
Angular waypoint trajectories	Joint admittance
Cartesian joystick	Null space admittance
Cartesian trajectory	Force control

© 2025 Kinova inc. All rights reserved.

coordinate system

a system used to represent a position in three-dimensional space, consisting of three coordinate axes and an origin

DoF

the number of variable directions needed to define the configuration of a robot, particularly for all the directions in which the motion can occur

EMC

the capability of electrical equipment to function properly in the electromagnetic environment

EMI

unwanted electromagnetic interference generated by an external source

end effector

device specifically designed for attachment to the flange of the wrist

endpoint

nominal commanded *position* that the robot tries to reach with the *TCP* at the end of a motion path

Euler angle

the rotation in three dimensions of a rigid body in terms of a *sequence* of three rotations with respect to a *coordinate system*

event

an action that happens, and is recognized by the software or firmware

factory settings

the configuration settings of the robot as they were when the robot arrived from the manufacturer; configuration settings include the network settings and base configuration

force control

control a *tool* by sending *wrench* commands to the tool; wrench commands include force and torque

FOV

associated with cameras and optical devices, it is the angular scope of vision

FPS

frames per second

frame

a system used to represent a position in three-dimensional space, consisting of three coordinate axes and an origin

gravity vector

gravitational acceleration with direction and strength; measured in m/s^2 in each Cartesian direction (X, Y, Z)

GPI

General Purpose Input

© 2025 Kinova inc. All rights reserved.

GPIO
General Purpose Input/Output

HDMI
High-definition Multimedia Interface

IC
Integrated Circuit

IEEE
Institute of Electrical and Electronics Engineers

I^2C
Inter-Integrated Circuit (bus)

I/O
refers to the information that is passed into or out of a computer

IP
Ingress Protection

IP
Internet Protocol

ISO
International Organization for Standardization

IT
Information Technology

joint
section of the manipulator system that allows one rotational degree of freedom

joint admittance mode
mode of operation in which the application of external force at the links rotate joints

joint angle
the position of every joint of a robot as series of angles

joint space
the set of all possible joint *positions*

LED
Light-emitting diode

map
a set of associations between controller device inputs and actions to be triggered by those inputs when the map is active

mapping
a full definition of the possible correspondences between controller device inputs and actions that are triggered by those inputs when the mapping is active; it can consist of multiple *maps*, for example, to enable multiple different modes on the same controller device

non-blocking

© 2025 Kinova inc. All rights reserved.

the ability for a robotic program to proceed to its next step even when the current action is not finished

notifications

a log of an *event* related to a particular *topic* that happens while a user is using the robot

null space

mathematical space of joint speeds where the robot can change its configuration (generate joint speed and motion) without changing the end-effector pose (Null Twist at the end effector)

null space admittance

robot configuration changed by applying external forces at the links without affecting the *tool pose*

NVRAM

non-volatile random access memory

operating mode

a way of operating with the robot; not the same as operational states of the robot

Update	the process of updating
Update completed	the process of updating is completed successfully
Update failed	the process of updating started but failed to complete
Shutting down	arm is in process of shutting down
Run	normal operating mode; arm is ready to accept control inputs
Fault	robot is in an error state

orientation

the pure rotations that should be applied to the body to move it from a reference placement to its current placement

path

continuous locus of points, or positions in three dimensional space, traversed by the *TCP* and described in a specified *coordinate system*

path — angular

thee set of at least two angular *pose*, through which the actuator values angles should pass during motion

path — Cartesian

the set of at least two Cartesian *poses*, through which the *tool* of the robot should pass during motion

© 2025 Kinova inc. All rights reserved.

path planning

computation of a path to reach a goal pose subject to applicable constraints and criteria

payload

the load the robot carries, excluding the tool attached to the flange

payload — max

computation of a path to reach a goal pose subject to applicable constraints and criteria

PC

personal computer

pinch point

an area in which a body part can get in between a stationary part and a moving part of the machinery

pose

the position and orientation of a rigid body in *Cartesian space*

position

the definition of the location of an object location in 3D space, usually defined by a 3D *coordinate system* using X, Y, and Z coordinates

protection zone

an area where the robot cannot enter

redundancy

occurs when a manipulator, or robot, has more degrees of freedom than it needs to execute a given task;

applicable to robots with 7 or more *DoF*

redundancy optimization

method used to avoid a singularity by using redundant degrees-of-freedom motion, if available

RNDIS

Remote Driver Network Interface Specification

ROS

Robot Operating System

RPC

Remote Procedure Call

RPM

revolutions per minute

RS

Recommended Standard

RTSP

Real Time Streaming Protocol

RX

© 2025 Kinova inc. All rights reserved.

receiver

safeties

hardware limitations that are monitored to increase robot safety

Safety zone

see *protection zone*

sequence

an ordered list of actions that a program must perform to complete its task; the sequence can be started, paused, resumed, and stopped

servoing mode

a modality through which commands are transmitted to robot devices during operation

High-level servoing

The user controls the robot by sending a single command to the base. The base manages the low-level details of executing the command, breaking it down, applying any relevant high-level protections, and routing commands to the desired devices through a 1 kHz communication loop with the devices.

Single level

a single user sends commands to a base

Low-level servoing

The user controls the robot by sending a series of actuator commands to the base through a user-controlled loop. The base routes these commands to the desired device through its own 1 kHz communication loop with the actuators.

singularity avoidance

strategy to avoid configurations where the robot loses its ability to move the end effector in a given direction no matter how it moves its joints

snapshot

a capture of the instantaneous position of the robot

Table 119: Types of snapshots

Cartesian position	Joint angles
Gripper position	Combined robot position and gripper position

SSID

© 2025 Kinova inc. All rights reserved.

Service Set Identifier

TCP

Transmission Control Protocol

TCP

the position and orientation of the tool; tool center point

TCP/IP

set of communication protocols used in computer networks and in the Internet

teaching mode

a feature available through the Kortex Web App in which users put the robot into *admittance*, move the robot by hand, and capture *positions* and gripper *snapshots* within a *sequence*

tool

the device attached to the end of a robot, designed to directly interact with the environment

tool configuration

configurations made to enable use of a *tool* tool at the *end effector position* of the robot; consists of the mass and *center of mass* of the tool, and the *tool transform*

tool frame

a *coordinate system* attached to the *end effector tool*

tool transform

translation and orientation between the interface module reference *frame* and the reference frame of the *tool* attached to the end of the robot

topic

a set of related robot *events* to which the user can subscribe and receive notifications as part of a Publisher-Subscriber (pub-sub) arrangement

Table 120: Examples of topics

User	Configuration change or backup
Controller device input	Factory restore
Safety	Protection zone
Action or sequence	Control, operation, or servoing mode
Connection and disconnection of arm, controller, or tool	

For a full list of events, refer to https://github.com/Kinovarobotics/Kinova-kortex2_Gen3_G3L/blob/master/linked_md/NotificationTopics.md

torque control

motion of the robot *joints* controlled by sending low-level torque commands to the actuators

trajectory

© 2025 Kinova inc. All rights reserved.

a time-parametrized path in the robot workspace that can be defined by the user

trajectory mode

mode of operation in which the user specifies an endpoint, in *joint space* or *Cartesian space*, that the robot should reach

twist

generalized velocity *vector*, which is a combination of translational velocity and rotational velocity

TX

transmitter

UART

Universal Asynchronous Receiver-Transmitter

UDP

User Datagram Protocol

UL

Underwriters Laboratories Inc., an organization dedicated to testing and creating standards for electrical products

upgrade package

a file with the extension `.swu` that contains firmware updates for all modules on the robot (base, actuator, interface, vision)

USB

industry computer bus standard that makes it easier to transfer data between devices

USB storage device

a portable storage device that plugs into *USB* ports

user profile

a collection of basic information about the person using the robot, along with username and password credentials for access

Control a robot according to the login credentials, which contains the permissions for reading, updating, and deleting different configuration items.

Notifications for *events* happening during a user's session are associated with the user who is logged in.

View notifications from the **Notifications** page in Kortex Web App if Kortex Web App is launched and connected to the robot before the notifications are sent.

UV

Ultraviolet light

vector

a mathematical representation of physical quantities that have both magnitude and direction, expressed in a *coordinate system*

VLAN

© 2025 Kinova inc. All rights reserved.

Virtual Local Area Network

waypoint

a desired intermediate point to be reached during a robot movement, either a Cartesian pose or a set of *joint angles*

Create a list of waypoints to make a trajectory that changes direction without reducing velocities to zero by smoothing changes in direction.

WEEE

Waste of Electrical and Electronic Equipment

wrench

a generalized force *vector*, which is a combination of linear force and torques

© 2025 Kinova inc. All rights reserved.

TOGETHER IN ROBOTICS

PROUDLY MADE IN

QUEBEC, CANADA

EN-UG-014-r10.1-202509

KINOVA

kinovarobotics.com | info@kinovarobotics.com | +1 (855) 654-6682

© Kinova inc 2025. All rights reserved.

[1]Intel, the Intel logo, and Intel Core are trademarks of Intel Corporation or its subsidiaries.